CUI INC
a bel group

SERIES: VSK-S25 | **DESCRIPTION:** AC-DC POWER SUPPLY

DISCONTINUED

FEATURES

- up to 25W continuous power
- compact board mount design
- universal input (85~264 Vac / 100~370 Vdc)
- single output from 5~48 Vdc
- over voltage, over current, and short circuit protections
- UL/cUL safety approvals
- efficiency up to 87%

MODEL	output voltage (Vdc)	output current max (A)	output power max (W)	ripple and noise[1] typ (mVp-p)	efficiency typ (%)
VSK-S25-5U*	5	4.1	20.5	50	79
VSK-S25-9U*	9	2.5	22.5	50	81
VSK-S25-12U*	12	2.1	25	50	83
VSK-S25-15U*	15	1.6	25	50	84
VSK-S25-24U	24	1.1	25	50	85
VSK-S25-48U	48	0.5	25	50	87

Notes: 1. Ripple and noise are measured at 20 MHz BW by "parallel cable" method with 1 uF ceramic and 10 uF electrolytic capacitors on the output.
2. * Discontinued model.

PART NUMBER KEY

VSK-S25 - XXU

Base Number — Output Voltage

DISCONTINUED

INPUT

parameter	conditions/description	min	typ	max	units
voltage		85 100		264 370	Vac Vdc
frequency		47		63	Hz
current	at 115 Vac at 230 Vac			600 340	mA mA
inrush current	at 115 Vac at 230 Vac		16 30		A A
leakage current	at 230 Vac, 50 Hz (RMS)		0.1		mA
input fuse	3.15 A/250 V, slow-blow type (external)				

OUTPUT

parameter	conditions/description	min	typ	max	units
capacitive load	5 Vdc output model 9 Vdc output model 12 Vdc output model 15 Vdc output model 24 Vdc output model 48 Vdc output model			12,000 5,600 5,400 2,400 1,400 800	µF µF µF µF µF µF
line regulation	at full load		±0.5		%
load regulation	at 10~100% load		±1		%
voltage set accuracy			±2		%
adjustability			±10		%
hold-up time	at 115 Vac at 230 Vac		15 80		ms ms
switching frequency			65		kHz
temperature coefficient			±0.02		%/°C

PROTECTIONS

parameter	conditions/description	min	typ	max	units
over current protection	auto restart	110			%
short circuit protection	continuous, auto restart				
over voltage protection	5 Vdc output model 9 Vdc output model 12 Vdc output model 15 Vdc output model 24 Vdc output model 48 Vdc output model			7.5 12 20 20 30 60	Vdc Vdc Vdc Vdc Vdc Vdc

SAFETY & COMPLIANCE

parameter	conditions/description	min	typ	max	units
isolation voltage	input to output for 1 minute input to ground for 1 minute	3,000 2,000			Vac Vac
safety approvals	UL60950-1, CE				
safety class	class I				
conducted emissions	CISPR22/EN55022, Class B				
radiated emissions	CISPR22/EN55022, Class B				
ESD	IEC/EN61000-4-2 Class B, contact ±6 kV/air ±8 kV				
radiated immunity	IEC/EN61000-4-3 Class A, 10V/m				
EFT/burst	IEC/EN61000-4-4 Class B, ±2 kV				
	IEC/EN61000-4-4 Class B, ±4 kV (external circuit required, see figure 2)				

SAFETY & COMPLIANCE (CONTINUED)

parameter	conditions/description	min	typ	max	units
surge	IEC/EN61000-4-5 Class B, ±1 kV/±2 kV IEC/EN61000-4-5 Class B, ±2 kV/±4 kV (external circuit required, see figure 2)				
conducted immunity	IEC/EN61000-4-6 Class A, 10 Vr.m.s				
PFM	IEC/EN61000-4-8 Class A, 10 A/m				
voltage dips & interruptions	IEC/EN61000-4-11 Class B, 0%-70%				
MTBF	as per MIL-HDBK-217F at 25°C	300,000			hrs
RoHS	2011/65/EU				

ENVIRONMENTAL

parameter	conditions/description	min	typ	max	units
operating temperature	see derating curves	-40		70	°C
storage temperature		-40		105	°C
storage humidity	non-condensing			95	%

DERATING CURVES

load vs. ambient temperature
(at 100~240 Vac)

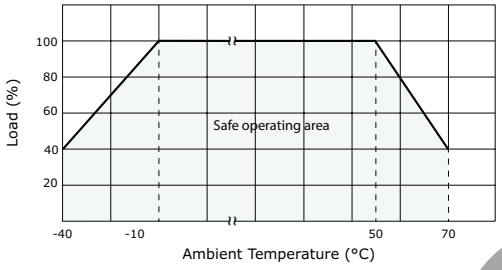

load vs. input voltage (Vac)
(at 25°C)

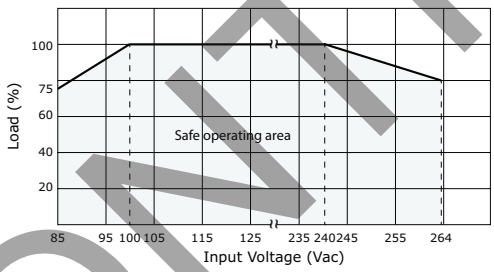

load vs. input voltage (Vdc)
(at 25°C)

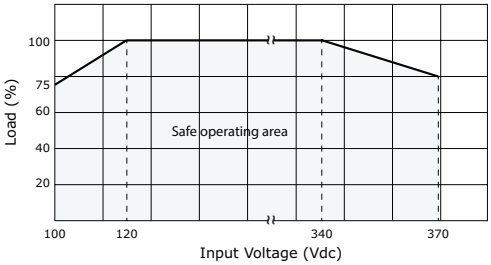

SOLDERABILITY

parameter	conditions/description	min	typ	max	units
hand soldering	for 3~5 seconds	350	360	370	°C
wave soldering	for 5~10 seconds (see wave soldering profile)	255	260	265	°C

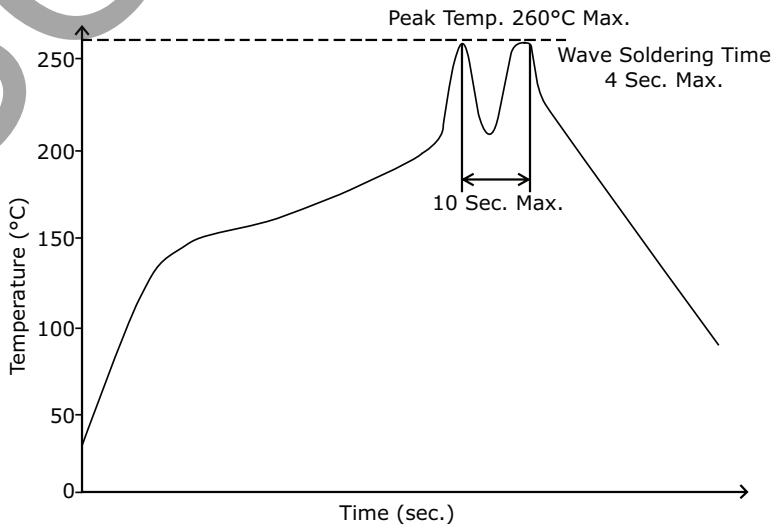

DISCONTINUED

MECHANICAL

parameter	conditions/description	min	typ	max	units
dimensions	70.0 x 48.0 x 23.5 (2.756 x 1.889 x 0.925 inch)				mm
case material	UL94V-0				
weight			120		g
cooling	convection cooling				

MECHANICAL DRAWING

units: mm[inches]
tolerance: ±0.50[±0.020]
pin diameter: Ø1.00[0.039]±0.10[±0.004]

PIN CONNECTIONS	
PIN	FUNCTION
1	GND ⏚
2	AC(N)
3	AC(L)
4	TRIM
5	-Vo
6	+Vo

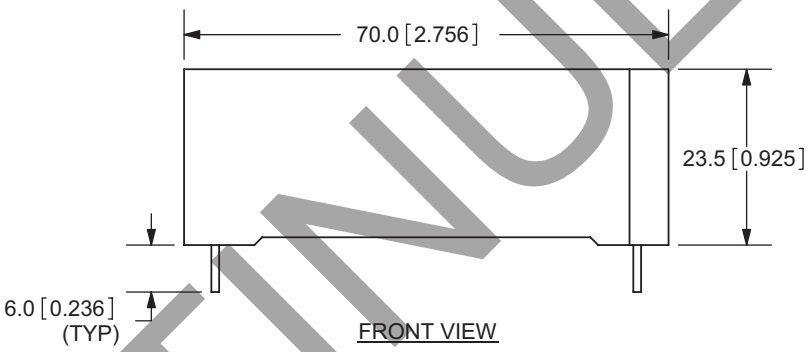

FRONT VIEW

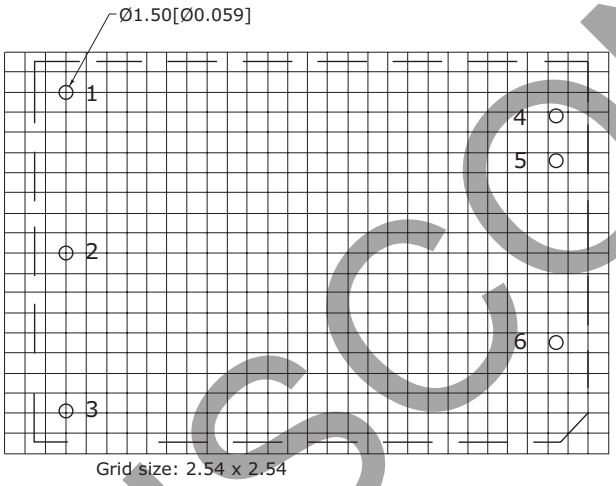

TOP VIEW
PCB LAYOUT

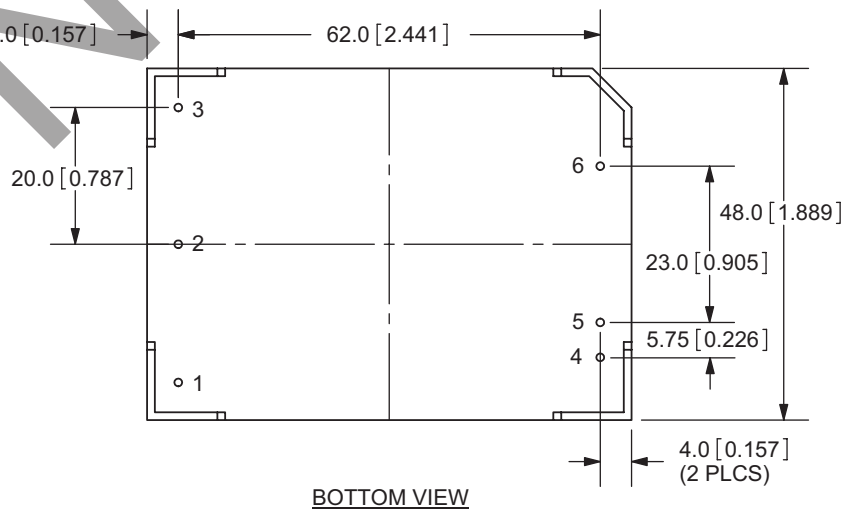

BOTTOM VIEW

DISCONTINUED

TYPICAL APPLICATION CIRCUIT

Figure 1

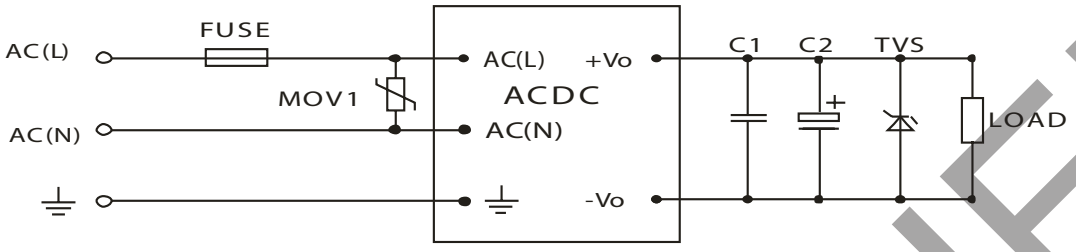

Table 1

Recommended External Circuit Components					
MODEL	FUSE	MOV1	C1	C2	TVS
VSK-S25-5U	3.15A/250V	S14K350	1μF	330μF	SMBJ7.0A
VSK-S25-9U	3.15A/250V	S14K350	1μF	330μF	SMBJ12A
VSK-S25-12U	3.15A/250V	S14K350	1μF	330μF	SMBJ20A
VSK-S25-15U	3.15A/250V	S14K350	1μF	330μF	SMBJ20A
VSK-S25-24U	3.15A/250V	S14K350	1μF	120μF	SMBJ30A
VSK-S25-48U	3.15A/250V	S14K350	1μF	68μF	SMBJ64A

EMC RECOMMENDED CIRCUIT

Figure 2

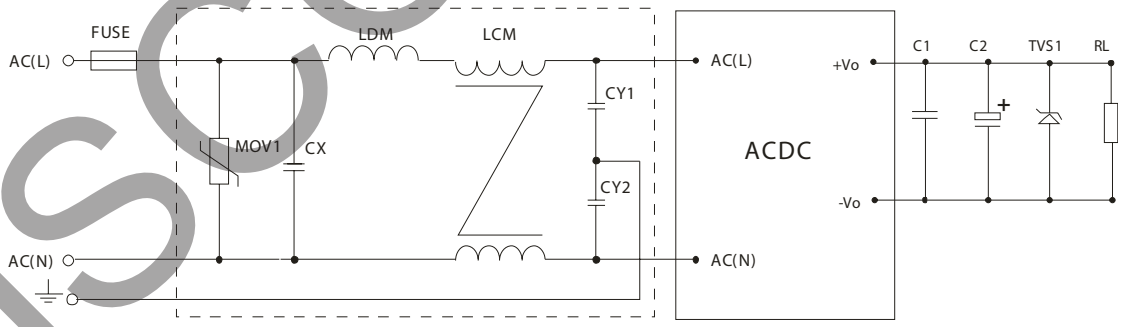

Table 2

Recommended External Circuit Components	
MOV1	S14K350
CY1, CY2	1000pF/400Vac
CX	0.1μF/275Vac
LCM	10mH
LDM	4.7μH/2A

Note: Also refer to Table 1

DISCONTINUED

APPLICATION NOTES

1. **Output voltage trimming**
   Leave open if not used.

Figure 3

Application Circuit for Trim pin
(part in broken line is the interior of models)

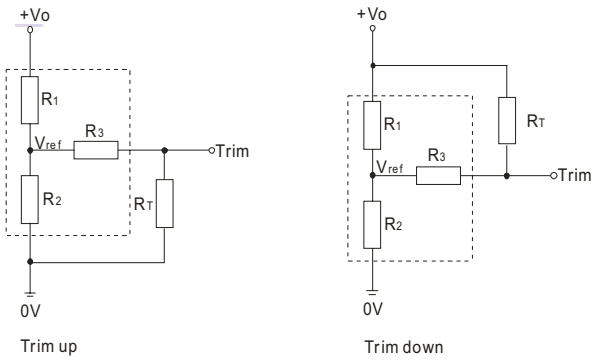

Formula for Trim Resistor

$$\text{up:}\quad R_T = \frac{aR_2}{R_2 - a} - R_3 \qquad a = \frac{Vref}{Vo' - Vref} \cdot R_1$$

$$\text{down:}\quad R_T = \frac{aR_1}{R_1 - a} - R_3 \qquad a = \frac{Vo' - Vref}{Vref} \cdot R_2$$

Note: Value for R1, R2, R3, and Vref refer to Table 3
R_T: Trim Resistor
a: User-defined parameter, no actual meanings
Vo': The trim up/down voltage

Table 3

Vout (Vdc)	R1 (kΩ)	R2 (kΩ)	R3 (kΩ)	Vref (V)
5	3.3	3.3	1	2.5
9	7.5	2.87	1	2.5
12	3.83	1	1	2.5
15	7.5	1.5	1	2.5
24	8.66	1	1	2.5
48	68	3.73	1	2.5

DISCONTINUED

Notes:
1. Output filtering capacitor C2 is an electrolytic capacitor, It is recommended to use high frequency and low impedance electrolytic capacitors. For capacitance and current of capacitor please refer to manufacture's datasheet. Voltage derating of capacitor should be 80% or above. C1 is used to filter high frequency noise. TVS is recommended component to protect post-circuits (when converter fails).
2. All specifications measured at Ta=25C, humidity <75%, nominal input voltage, and rated output load, unless otherwise specified.

REVISION HISTORY

rev.	description	date
1.0	initial release	07/26/2011
1.01	new template applied	03/07/2012
1.02	V-Infinity branding removed	08/21/2012
1.03	spec. update	11/05/2012
1.04	updated spec	01/08/2014
1.05	updated operating and storage temperatures, updated spec	02/25/2015
1.06	updated spec	06/11/2015
1.07	company logo updated	10/29/2020
1.08	discontinued model VSK-S25-15U, VSK-S25-9U	11/11/2022
1.09	discontinued model VSK-S25-12U, VSK-S25-5U	12/14/2022

The revision history provided is for informational purposes only and is believed to be accurate.

DISCONTINUED

CUI INC
a bel group

Headquarters
20050 SW 112th Ave.
Tualatin, OR 97062
800.275.4899

Fax 503.612.2383
cui.com
techsupport@cui.com

CUI offers a two (2) year limited warranty. Complete warranty information is listed on our website.

CUI reserves the right to make changes to the product at any time without notice. Information provided by CUI is believed to be accurate and reliable. However, no responsibility is assumed by CUI for its use, nor for any infringements of patents or other rights of third parties which may result from its use.

CUI products are not authorized or warranted for use as critical components in equipment that requires an extremely high level of reliability. A critical component is any component of a life support device or system whose failure to perform can be reasonably expected to cause the failure of the life support device or system, or to affect its safety or effectiveness.