CUI INC
a bel group

SERIES: VFM-XX | **DESCRIPTION:** DC EMI FILTER

FEATURES

- compact size
- suitable for use with wide range of dc-dc converters
- reduces common and differential mode noise

RoHS

MODEL

MODEL	input voltage range (Vdc)	input surge voltage[1] nominal (Vdc)	input current max (A)	isolation voltage[2] min (Vdc)
VFM-10A	0 ~ 75	100	10	1,500
VFM-15C	0 ~ 75	100	15	1,500
VFM-20A	0 ~ 75	100	20	1,500
VFM-25C	0 ~ 36	50	25	1,500

Note: 1. For 100 ms.
2. Input to ground, output to ground.

PART NUMBER KEY

VFM - **XX** **X**

Input Current

Mounting Style:
A = board mount
C = chassis mount

SPECIFICATIONS

parameter	conditions/description	min	nom	max	units
isolation voltage	input to ground, output to ground	1,500			Vdc
isolation resistance	input to ground, output to ground	10^7			Ω
dc resistance	total for two legs		16		mΩ

ENVIRONMENTAL

parameter	conditions/description	min	nom	max	units
operating temperature		-40		100	°C
case temperature				100	°C
storage temperature		-40		100	°C
cooling	natural convection				

MECHANICAL

parameter	conditions/description	min	typ	max	units
dimensions	VFM-10A: 2.00 x 1.00 x 0.46 [50.8 x 25.4 x 11.7 mm] VFM-15C: 4.06 x 3.11 x 0.89 [103.2 x 79 x 22.7 mm] VFM-20A: 2.00 x 1.60 x 0.50 [50.8 x 40.6 x 12.7 mm] VFM-25C: 4.06 x 3.11 x 0.89 [103.2 x 79 x 22.7 mm]				inch inch inch inch
case material	VFM-10A & VFM-20A: black plastic VFM-15C & VFM-25C: black coated steel				

MECHANICAL DRAWING

VFM-10A

units: inch [mm]
tolerance: inches: x.xx = ±0.02, x.xxx = ±0.010
mm: x.x = ±0.5, x.xx = ±0.25
pin size: 0.04 [1.02]

PIN CONNECTIONS	
PIN	Function
1	+Vin
2	-Vin
3	+Vout
4	-Vout
5	GND

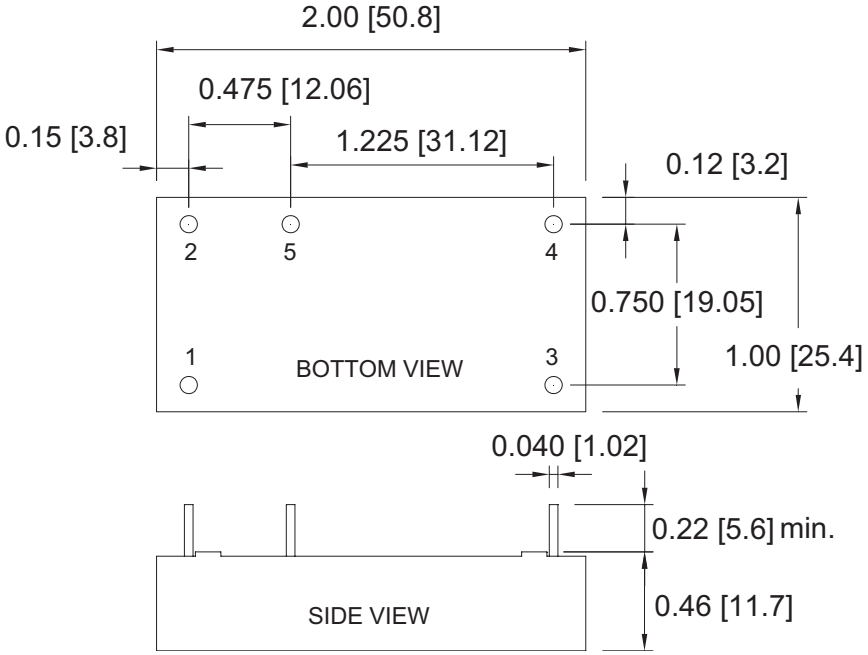

MECHANICAL DRAWING (CONTINUED)

VFM-20A

units: inch [mm]
tolerance: inches: x.xx = ±0.02, x.xxx = ±0.010
mm: x.x = ±0.5, x.xx = ±0.25
pin size: 0.04 [1.02]

PIN CONNECTIONS	
PIN	Function
1	+Vin
2	+Vin
3	-Vin
4	-Vin
5	+Vout
6	+Vout
7	-Vout
8	-Vout
9	GND

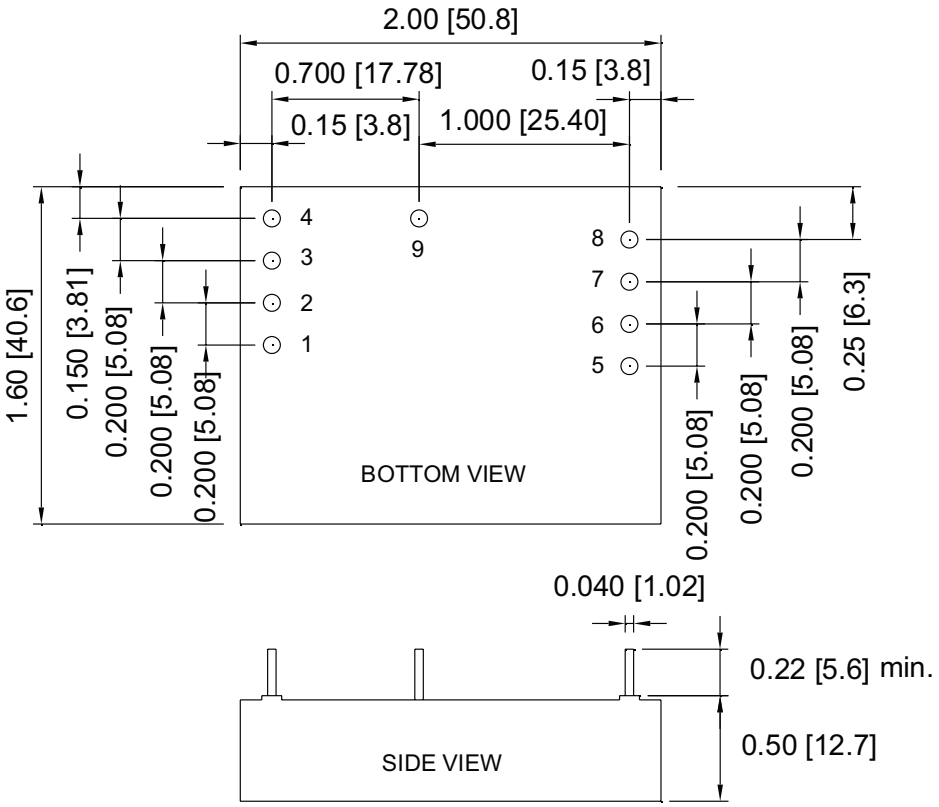

MECHANICAL DRAWING (CONTINUED)

VFM-15C & VFM-25C

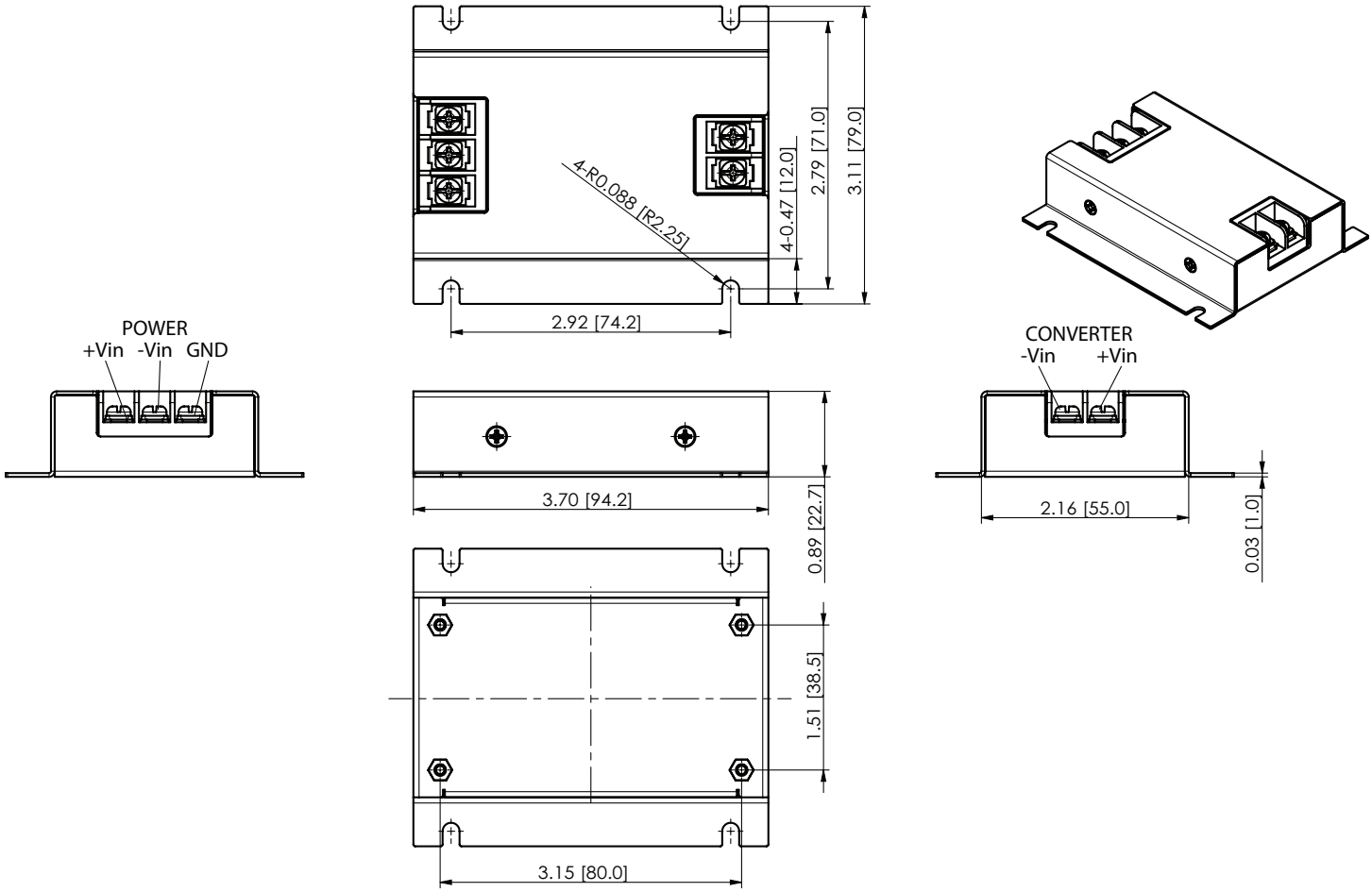

INTERNAL SCHEMATICS

Figure 1
VFM-10A

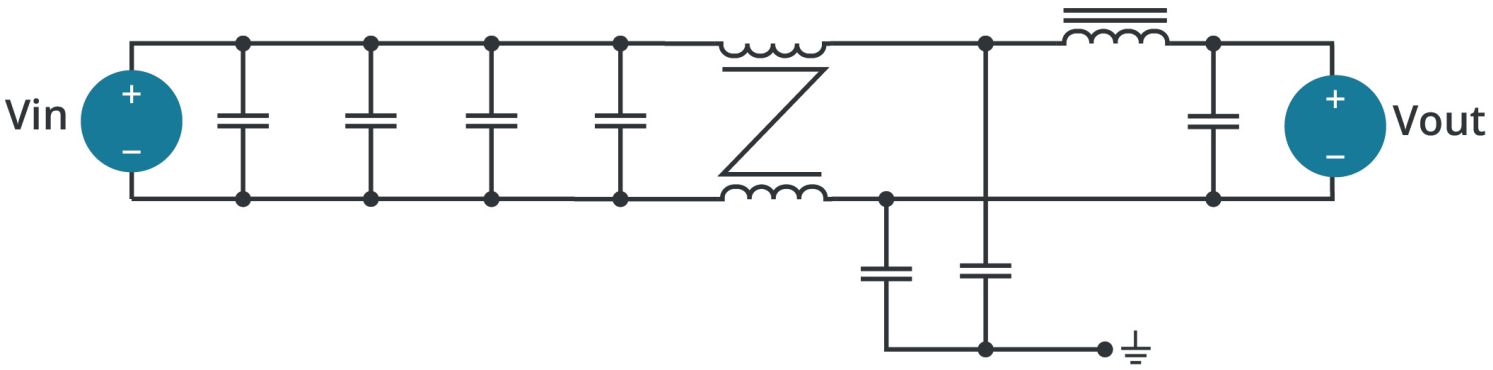

Figure 2
VFM-20A

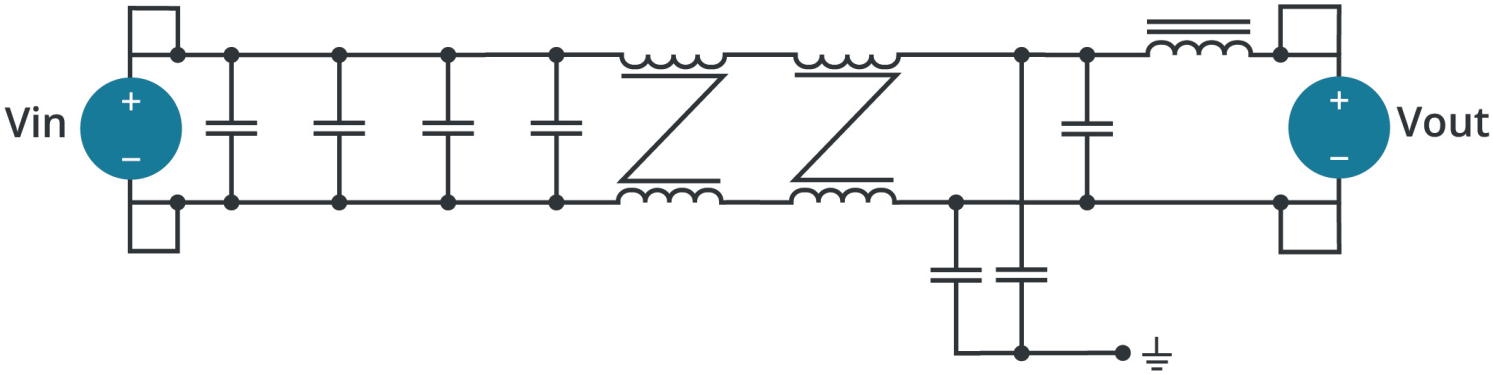

Figure 3
VFM-15C & VFM-25C

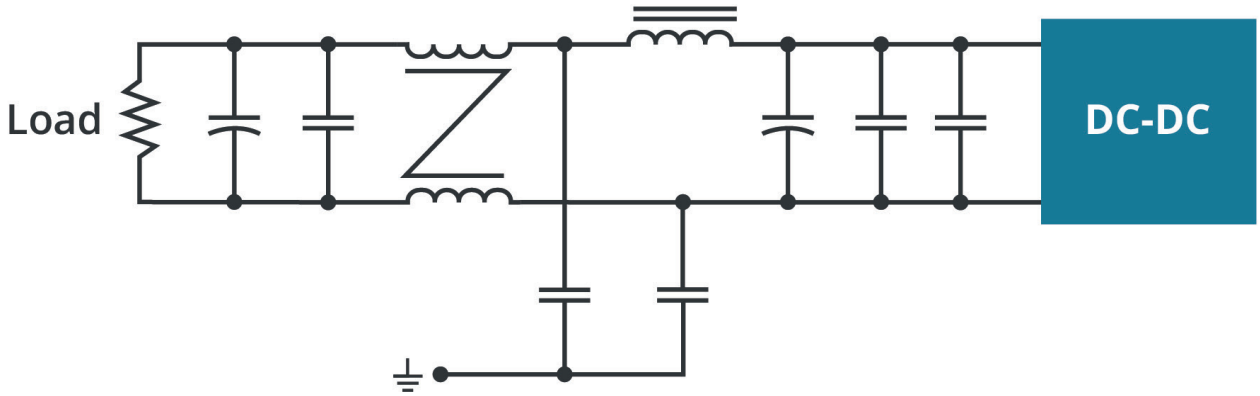

INSERTION LOSS GRAPHS

COMMON MODE VFM-10A

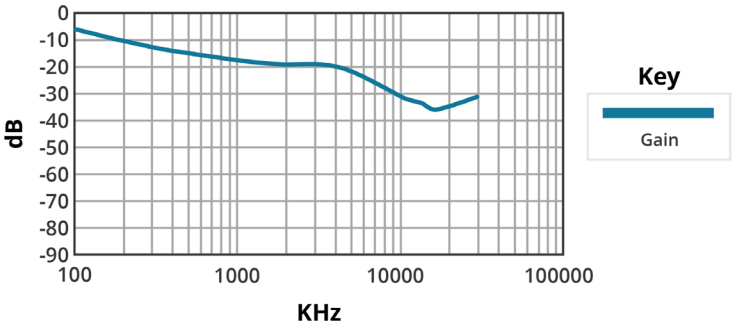

DIFFERENTIAL MODE VFM-10A

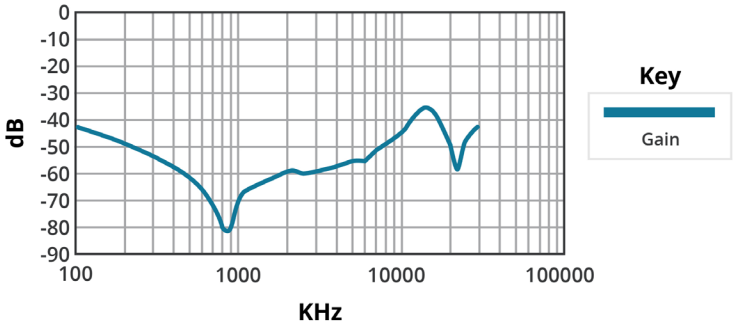

COMMON MODE VFM-15C

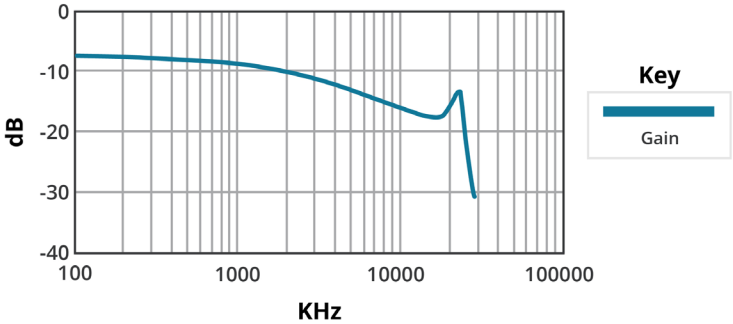

DIFFERENTIAL MODE VFM-15C

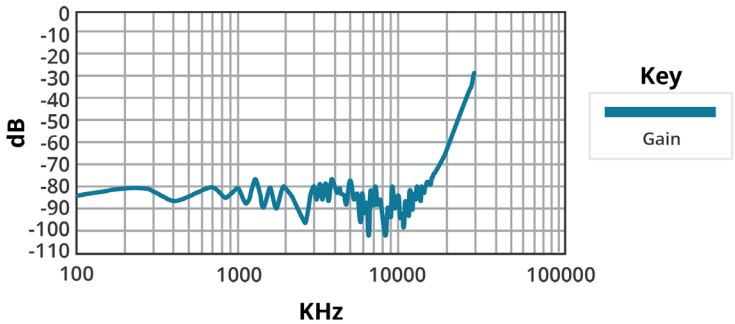

COMMON MODE VFM-20A

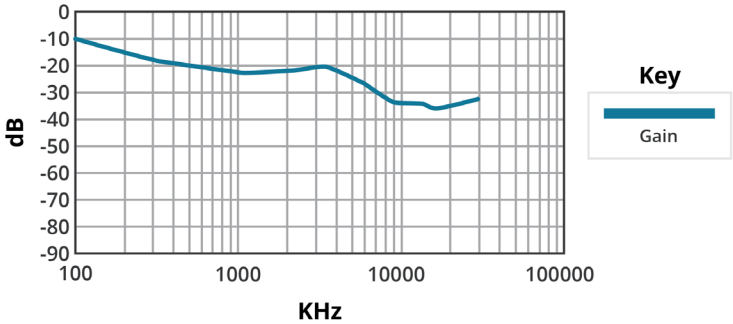

DIFFERENTIAL MODE VFM-20A

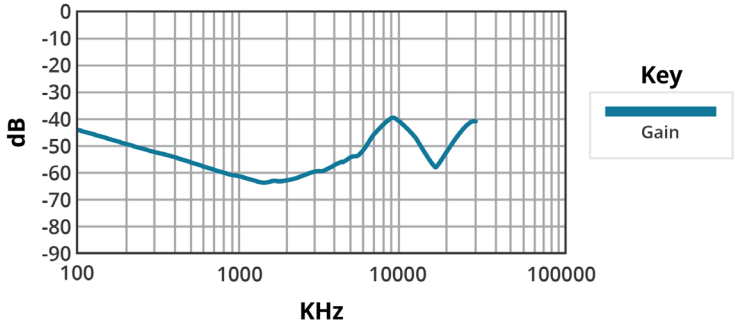

COMMON MODE VFM-25C

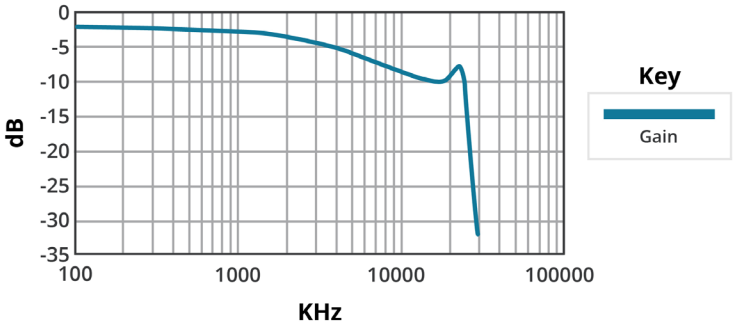

DIFFERENTIAL MODE VFM-25C

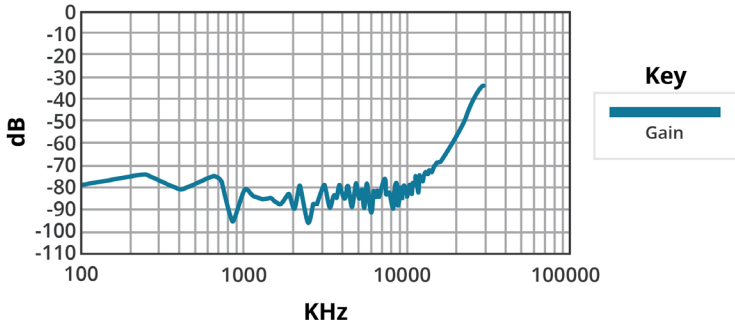

APPLICATION CIRCUIT

The following application note shows EN 55022 class B conducted emissions tests for the VFM-XX series EMI filters in series with a VHK or VHB series DC/DC converter and a purely resistive load. This information is for example only. Actual results may vary.

1) EMI Filtering - Connection Diagram

Filter Model (VFM-XX)	DC-DC Converter Model (VHXXXW)	C1	C2	CY1	CY2	CY3	CY4
VFM-10A	VHB50W-Q24-S5	47 µF/100 V KY	•••	•••	•••	•••	•••
	VHB50W-Q48-S5	47 µF/100 V KY	•••	•••	•••	•••	•••
VFM-15C	VHK200W	•••	•••	•••	•••	•••	•••
VFM-20A	VHB150W-Q24-S5	47 µF/100 V KY	220 µF/100 V KY	1000 pF / 2 KV	•••	1000 pF / 2 KV	560 pF/2 KV
	VHB150W-Q48-S5	•••	220 µF/100 V KY	1000 pF / 2 KV	•••	1000 pF / 2 KV	560 pF/2 KV
VFM-25C	VHK200W	•••	•••	•••	•••	•••	•••

Figure 4

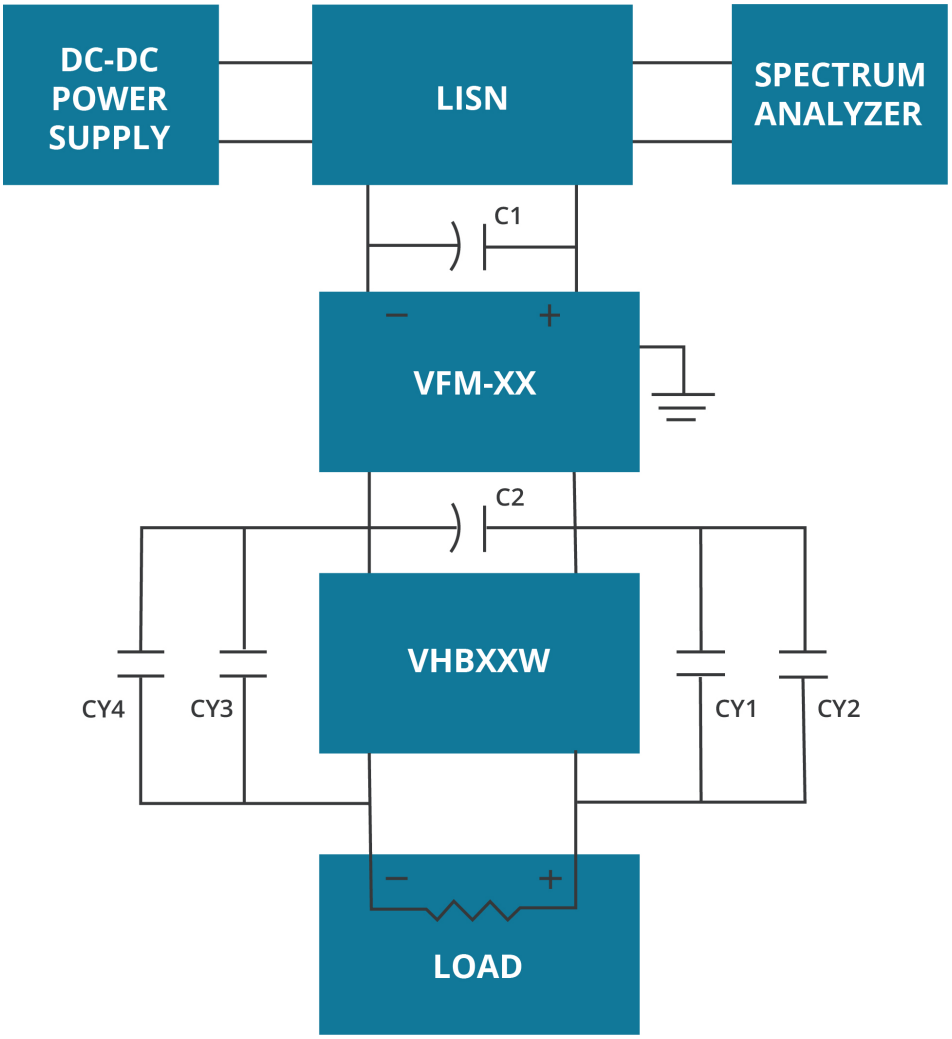

2) Conducted Emission Measurement

FILTER MODEL (VFM-10A)

DC-DC CONVERTER MODEL: VHB50W-Q24-S5

Vin = 12 Vdc

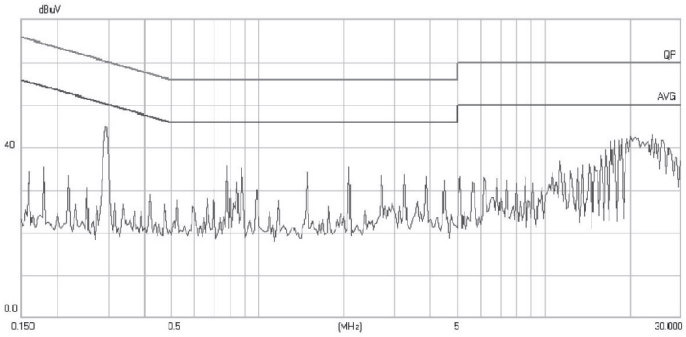

FILTER MODEL (VFM-15C)

DC-DC CONVERTER MODEL: VHK200W-Q48-S12

Vin = 48 Vdc

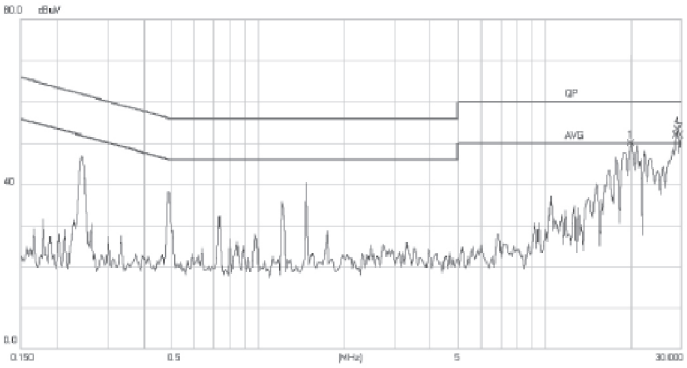

FILTER MODEL (VFM-20A)

DC-DC CONVERTER MODEL: VHB150W-Q24-S5

Vin = 12 Vdc

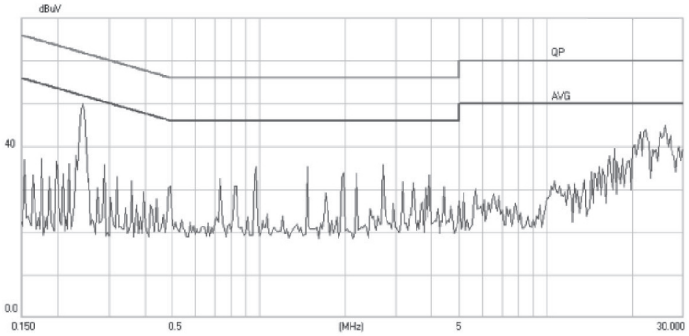

FILTER MODEL (VFM-25C)

DC-DC CONVERTER MODEL: VHK200W-Q24-S12

Vin = 24 Vdc

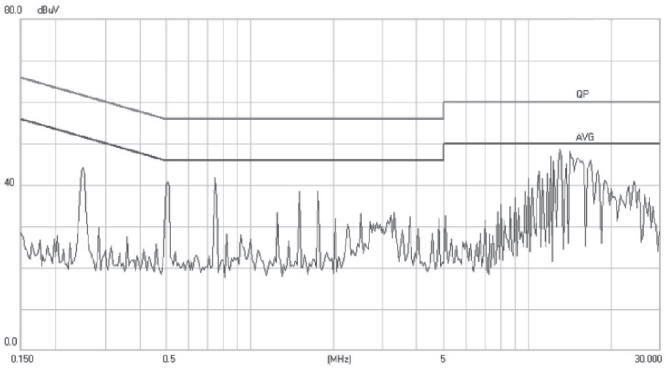

REVISION HISTORY

rev.	description	date
1.0	initial release	01/01/2017
1.01	specification updated to a new CUI template	01/17/2022
1.02	pin connection table updated	05/11/2022
1.03	pin size updated in the pin connection table	06/14/2022
1.04	header updated on page 6	04/26/2023

The revision history provided is for informational purposes only and is believed to be accurate.

CUI INC
a bel group

Headquarters
20050 SW 112th Ave.
Tualatin, OR 97062
800.275.4899

Fax 503.612.2383
cui.com
techsupport@cui.com

CUI offers a two (2) year limited warranty. Complete warranty information is listed on our website.

CUI reserves the right to make changes to the product at any time without notice. Information provided by CUI is believed to be accurate and reliable. However, no responsibility is assumed by CUI for its use, nor for any infringements of patents or other rights of third parties which may result from its use.

CUI products are not authorized or warranted for use as critical components in equipment that requires an extremely high level of reliability. A critical component is any component of a life support device or system whose failure to perform can be reasonably expected to cause the failure of the life support device or system, or to affect its safety or effectiveness.