CUI INC®

MODEL: AC-C7 NA | **DESCRIPTION:** AC CORD, NORTH AMERICA

MECHANICAL DRAWING

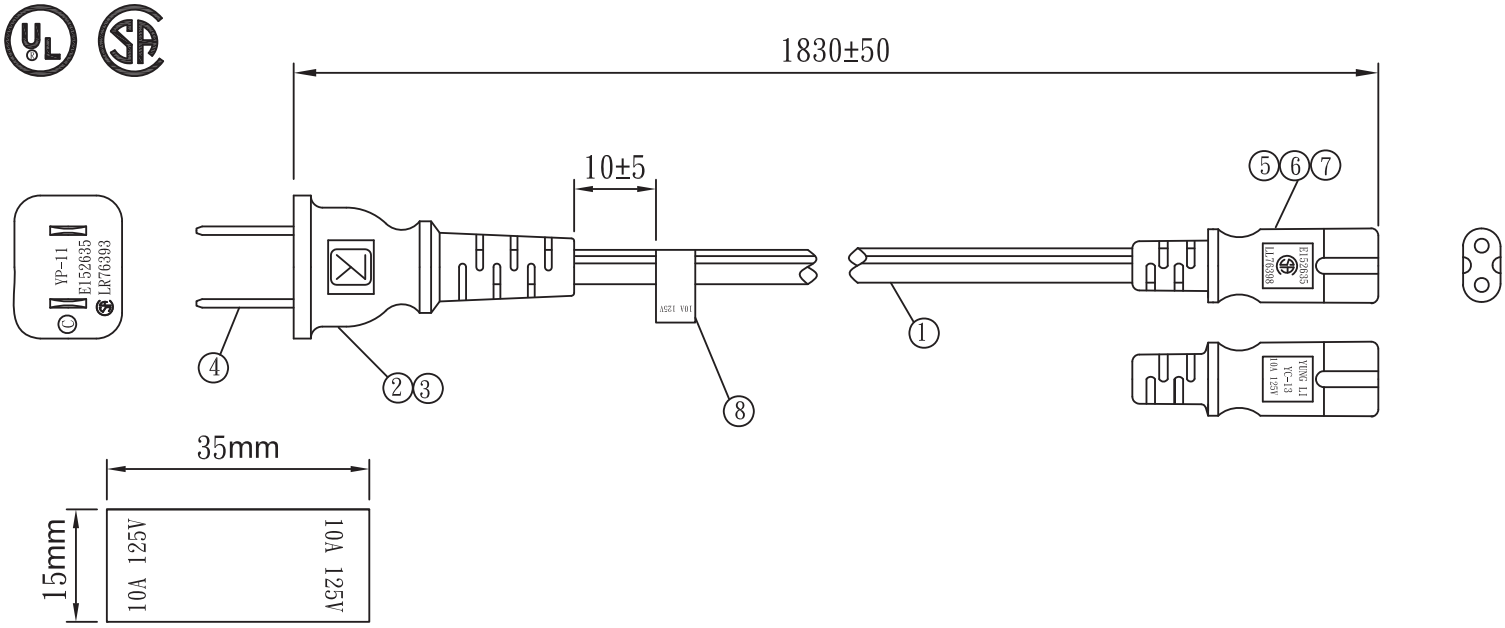

RoHS

NO.	SPECIFICATION	Q'TY
1	SPT-2 18/2C 105° BLACK	1PC
2	YP-11 INNER BODY	1PC
3	YP-11 PVC PLASTIC: 35P BLACK	15g/PC
4	TER: 98675BS-1/KDF 50T	2PCS
5	YC-13 PVC PLASTIC: 35P BLACK	9g/PC
6	YC-13 H.S.G	1PC
7	YC-13 TER	2PCS
8	LABEL: 35*15mm	1PC

Tolerance
>0±0.30
>1.0±0.50
>10.0±1.0
>20.0±2.0
Angle: ±1°

REVISION HISTORY

rev.	description	date
1.0	initial release	08/16/2011

The revision history provided is for informational purposes only and is believed to be accurate.

CUI INC®

Headquarters
20050 SW 112th Ave.
Tualatin, OR 97062
800.275.4899

Fax 503.612.2383
cui.com
techsupport@cui.com

CUI offers a one (1) year limited warranty. Complete warranty information is listed on our website.

CUI reserves the right to make changes to the product at any time without notice. Information provided by CUI is believed to be accurate and reliable. However, no responsibility is assumed by CUI for its use, nor for any infringements of patents or other rights of third parties which may result from its use.

CUI products are not authorized or warranted for use as critical components in equipment that requires an extremely high level of reliability. A critical component is any component of a life support device or system whose failure to perform can be reasonably expected to cause the failure of the life support device or system, or to affect its safety or effectiveness.