CUI INC
a bel group

SERIES: PBO-3 | DESCRIPTION: AC-DC POWER SUPPLY

DISCONTINUED

FEATURES

- up to 3 W continuous power
- ultra-compact SIP package
- available in straight-pin and bent-pin configurations
- wide input voltage range
- over current and short circuit protections
- 3,000 Vac isolation
- IEC, EN, UL 62368 safety approvals
- efficiency up to 77%

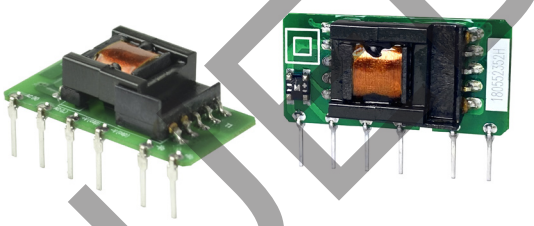

MODEL	output voltage (Vdc)	output current min (mA)	output current max (mA)	output power max (W)	ripple and noise[1] max (mVp-p)	efficiency[2] typ (%)
PBO-3-S3.3[4,5]	3.3	60	600	1.98	150	65
PBO-3-S5[4,5]	5	60	600	3	150	70
PBO-3-S9[4]	9	33.3	333	3	150	73
PBO-3-S12[4,5]	12	25	250	3	150	74
PBO-3-S15[5]	15	20	200	3	150	75
PBO-3-S24[4,5]	24	12.5	125	3	150	77

Notes:
1. At full load, nominal input, 20 MHz bandwidth oscilloscope, with a 1 µF ceramic and 10 µF electrolytyic capacitor on the output.
2. At 230 Vac input.
3. All specifications are measured at Ta=25°C, humidity <75%, 115 or 230 Vac input voltage, and rated output load unless otherwise specified.
4. Discontinued model - vertical pin version.
5. Discontinued model - right-angle pin version.

PART NUMBER KEY

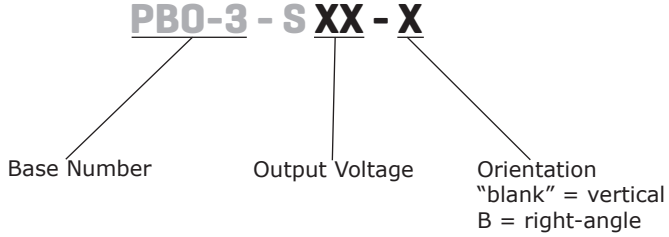

INPUT

parameter	conditions/description	min	typ	max	units
voltage		85 70		305 430	Vac Vdc
frequency		47		63	Hz
current	at 115 Vac at 277 Vac			0.12 0.06	A A
inrush current	at 115 Vac at 277 Vac		13 23		A A
no load power consumption	at 230 Vac			0.25	W

OUTPUT

parameter	conditions/description	min	typ	max	units
capacitive load	3.3 Vdc output models 5 Vdc output models 9/12 Vdc output models 15 Vdc output models 24 Vdc output models			820 680 470 330 100	µF µF µF µF µF
initial set point accuracy	3.3 Vdc output models all other models			±6 ±5	% %
line regulation	at full load 3.3 Vdc output models all other models		 ±2.5 ±1.5		 % %
load regulation	from 10~100% load 24 Vdc output models all other models		 ±6 ±3		 % %
switching frequency				65	kHz
temperature coefficient			±0.15		%/°C

PROTECTIONS

parameter	conditions/description	min	typ	max	units
over current protection	auto recovery	110		500	%
short circuit protection	continuous, auto recovery				

SAFETY & COMPLIANCE

parameter	conditions/description	min	typ	max	units
isolation voltage	input to output for 1 minute	3,000			Vac
safety approvals	certified to 62368: IEC, EN, UL				
safety class	class II				
conducted emissions	CISPR22/EN55022 Class A, (recommended circuit 1,2,6)				
	CISPR22/EN55022 Class B, (recommedned circuit 3,4,5)				
radiated emissions	CISPR22/EN55022 Class A, (recommended circuit 1,2,6)				
	CISPR22/EN55022 Class B, (recommended circuit 3,4,5)				
ESD	IEC/EN61000-4-2, contact ±4 kV, perf. Criteria B				
radiated immunity	IEC/EN61000-4-3, 10V/m, perf. Criteria A				
EFT/burst	IEC/EN61000-4-4, ±2 kV (recommended circuit 1,2,3), perf. Criteria B				
	IEC/EN61000-4-4, ±4 kV (recommended circuit 4,5,6), perf. Criteria B				
surge	IEC/EN61000-4-5, line to line ±1 kV (recommended circuit 1,2), perf. Criteria B				
	IEC/EN61000-4-5, line to line ±2 kV (recommended circuit 6), perf. Criteria B				
	IEC/EN61000-4-5, line to line ±1 kV/line to ground ±2 kV (recommended circuit 3) perf. Criteria B				
	IEC/EN61000-4-5, line to line ±2 kV/line to ground ±4 kV (recommended circuit 4,5) perf. Criteria B				
conducted immunity	IEC/EN61000-4-6 Class A, 10 Vr.m.s, perf. Criteria A				

DISCONTINUED

SAFETY & COMPLIANCE (CONTINUED)

parameter	conditions/description	min	typ	max	units
voltage dips & interruptions	IEC/EN61000-4-11, 0%-70%, perf. Criteria B				
MTBF	as per MIL-HDBK-217F at 25 °C	300,000			hours
RoHS	2011/65/EU				

Notes: 1. The power supply is considered a component which will be installed into final equipment. The final equipment still must be tested to meet the necessary EMC directives.

ENVIRONMENTAL

parameter	conditions/description	min	typ	max	units
operating temperature	see derating curves	-40		85	°C
storage temperature		-40		105	°C
storage humidity	non-condensing			85	%

SOLDERABILITY

parameter	conditions/description	min	typ	max	units
hand soldering	for 3~5 seconds	350	360	370	°C
wave soldering	for 5~10 seconds	255	260	265	°C

WAVE SOLDERING PROFILE

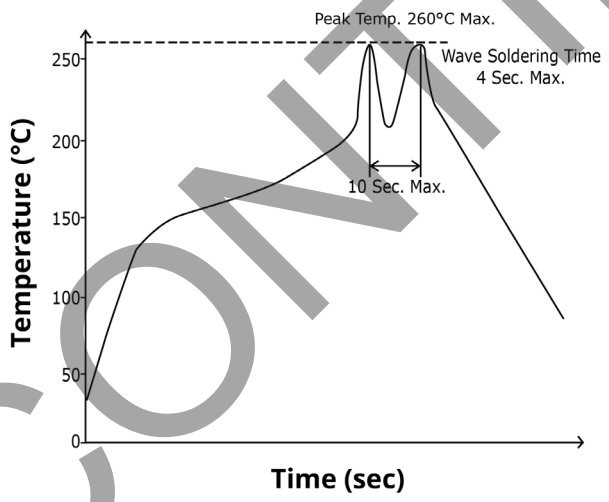

DISCONTINUED

DERATING CURVES

TEMPERATURE DERATING CURVE

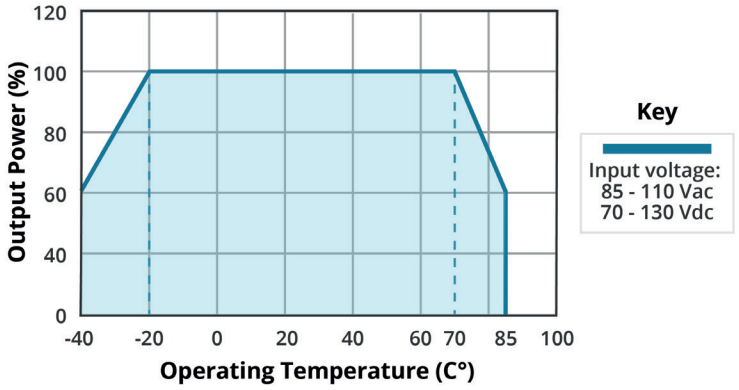

TEMPERATURE DERATING CURVE

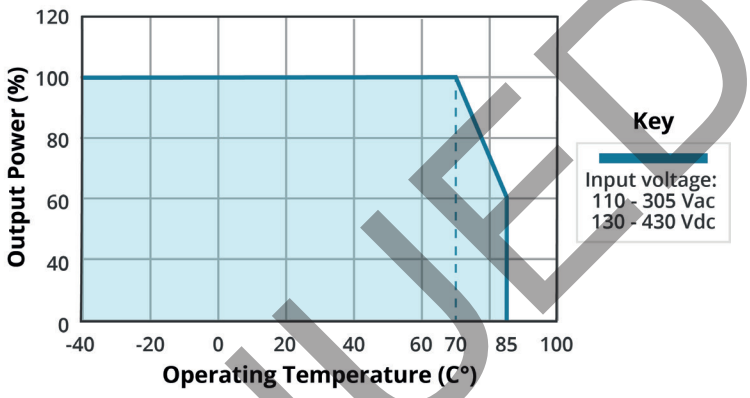

INPUT VOLTAGE DERATING CURVE (25°C)

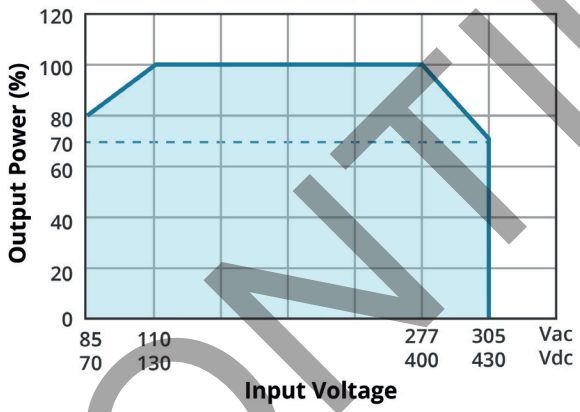

EFFICIENCY CURVES

EFFICIENCY VS INPUT VOLTAGE (FULL LOAD)

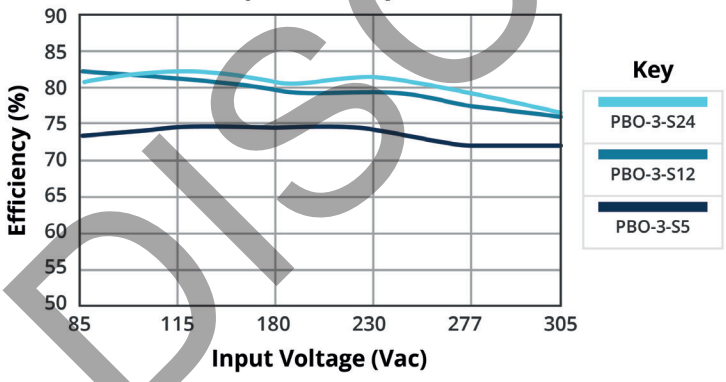

EFFICIENCY VS OUTPUT LOAD (VIN = 230 VAC)

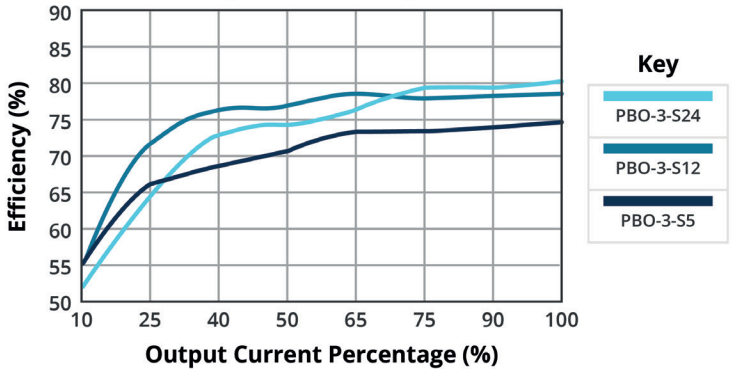

DISCONTINUED

MECHANICAL

parameter	conditions/description	min	typ	max	units
dimensions	vertical models: 35.00 x 11.00 x 18.00 (1.38 x 0.43 x 0.71 inches) right-angle models: 35.00 x 18.00 x 11.00 (1.38 x 0.71 x 0.43 inches)				mm mm
weight			6		g

MECHANICAL DRAWING

Vertical Orientation
units: mm[inch]
pin section tolerance: ±0.10[±0.004]
tolerance: ±0.50[±0.020]

PIN CONNECTIONS	
PIN	Function
1	AC (N)
3	AC (L)
5	+V(CAP)
7	-V(CAP)
10	-Vo
12	+Vo

Note: 1. It is required to add C1 between pins 5 & 7 (see application circuits).

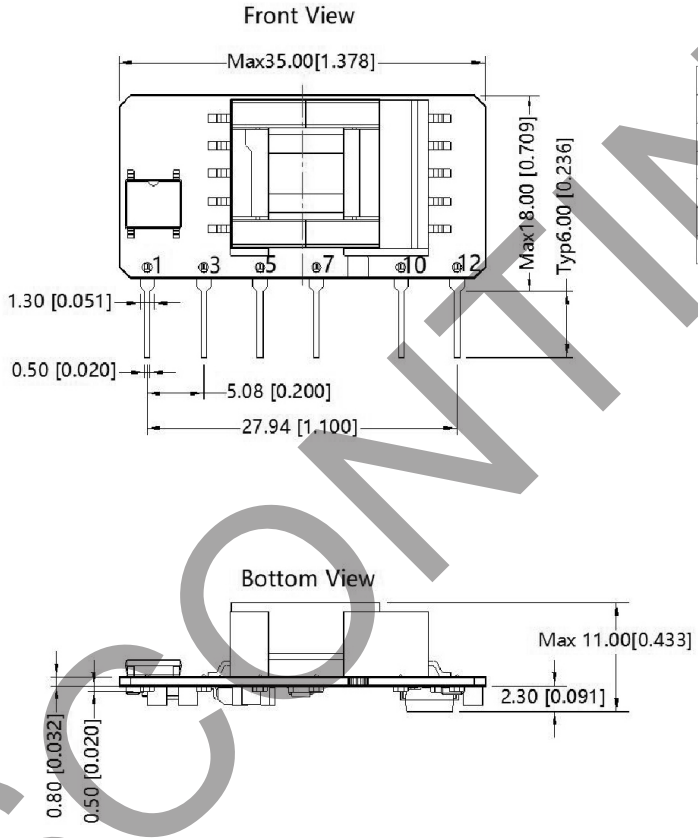

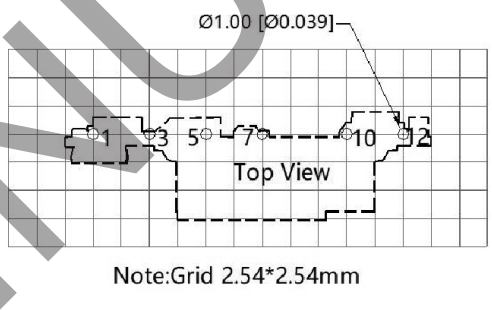

DISCONTINUED

MECHANICAL DRAWING (CONTINUED)

Right-angle Orientation
units: mm[inch]
pin section tolerance: ±0.10[±0.004]
tolerance: ±0.50[±0.020]

PIN CONNECTIONS	
PIN	Function
1	AC (N)
3	AC (L)
5	+V(CAP)
7	-V(CAP)
10	-Vo
12	+Vo

Note: 1. It is required to add C1 between pins 5 & 7 (see application circuits).

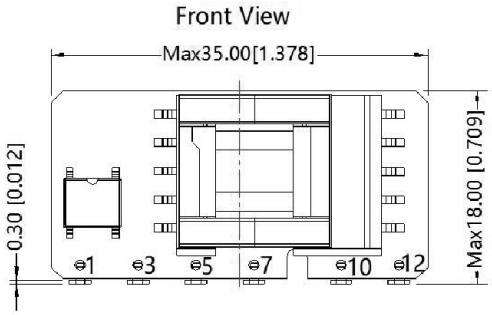

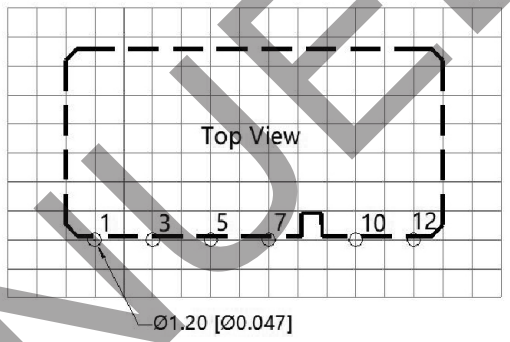

Note:Grid 2.54*2.54mm

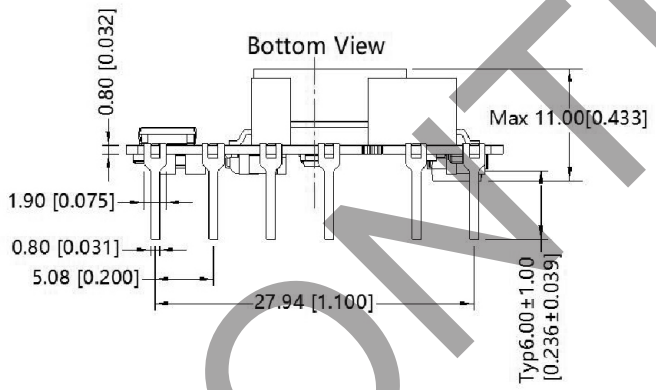

DISCONTINUED

APPLICATION DESIGN REFERENCE

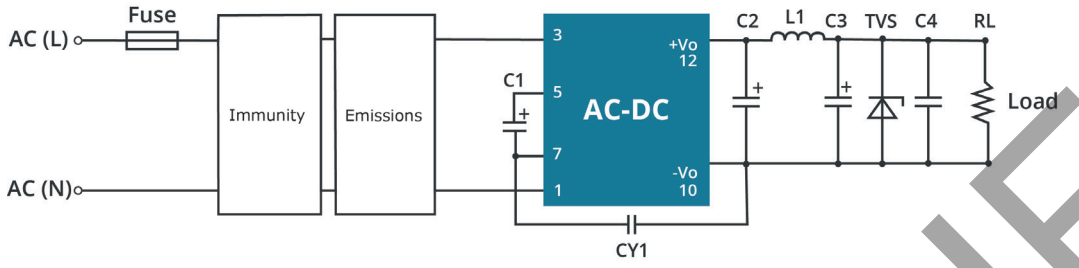

PBO-3 series additional circuits design reference			
Immunity design circuits for reference		Emissions design circuits for reference	
Class III	Class IV	Class A	Class B
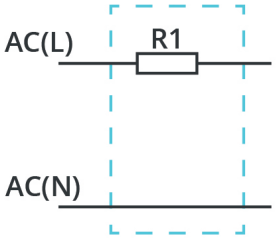	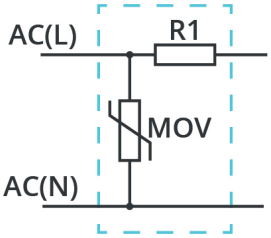	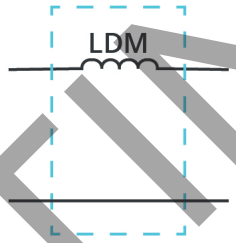	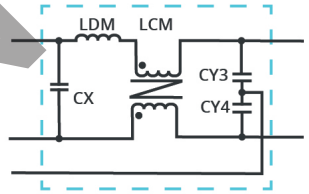

PBO-3 Series additional component selection guide							
Part no.	FUSE (required)	C1 (required)	C2 (required)	L1 (required)	C3 (required)	C4	CY1 (required)
PBO-3-S3.3	1A/300V	10μF/450V (-20°C~85°C) 22μF/450V (-40°C~85°C)	270μF/16V (solid-state capacitor)	4.7μH (max 60mΩ)	120μF/25V	0.1μF/50V	1.0nF/400 Vac
PBO-3-S5					68μF/35V		
PBO-3-S9							
PBO-3-S12							
PBO-3-S15			470μF/35V		47μF/35V		
PBO-3-S24			220μF/35V				

Note: 1. C1: Input capacitors, C2: output storage capacitors, must be connected externally.
2. It is recommended using an electrolytic capacitor with high frequency and low ESR rating for C3. Combined with C2, L1, they form a pí-type filter circuit. Choose a capacitor voltage rating with at least 20% margin, in other words not exceeding 80%. C4 is a ceramic capacitor, ursed for filtering high frequency noise. A suppressor diode (TVS) is a recomended to protect the application in case of a converter failure and specification should be 1.2 times of the output voltage.

PBO-3 Series Enviromental and EMC selection guide						
Recommended circuit	Application enviromental	Typical industry	Input voltage range	Enviroment temperature	Emissions	Immunity
1/2	Basic application	None	85 ~ 305 Vac	-40° ~ 88°C	Class A	Class III
3	Indoor civil enviroment	Smart home / Home appliances (2Y)		-25° ~ 55°C	Class B	Class III
	Indoor general enviroment	Intelligent building / Intelligent agriculture				
4/5	Indoor industrial enviroment	Manufacturing workshop		-25° ~ 55°C	Class B	Class IV
6	Oudoor general enviroment	ITS / Video monitoring / Charging point / Communica-tion / Securitiy and protection		-40° ~ 85°C	Class A	Class IV

DISCONTINUED

EMC RECOMMENDED CIRCUIT

Circuit 1

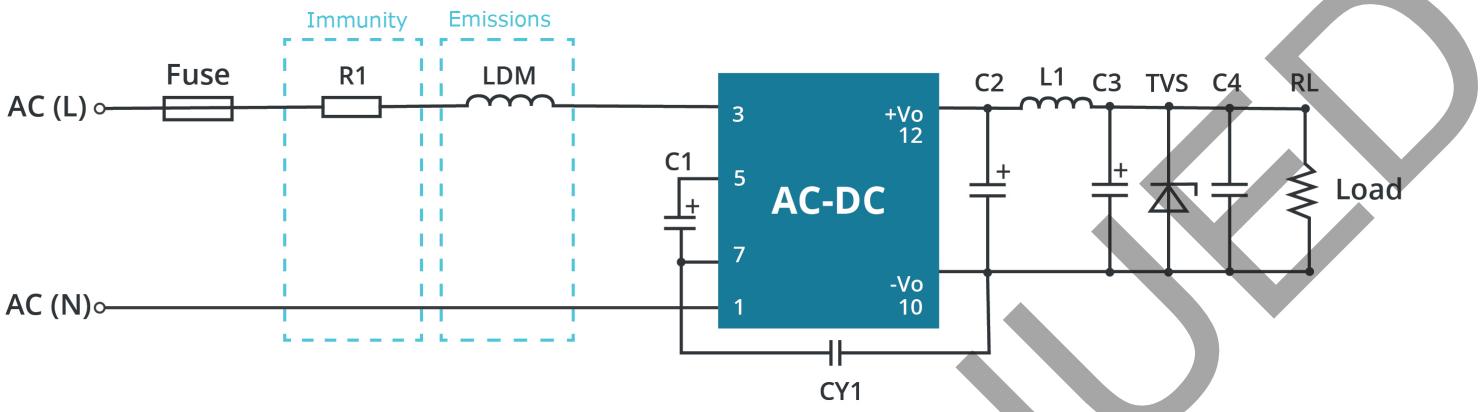

Table 1

Application enviromental	Ambient temperature range	Immunity Class	Emissions Class
Basic application	-40°C ~ 85°C	Class III	Class A

Component	Recommended value
R1	12Ω/3W
LDM	4.7mH
FUSE (required)	1A/300V, slow-blow

Circuit 2

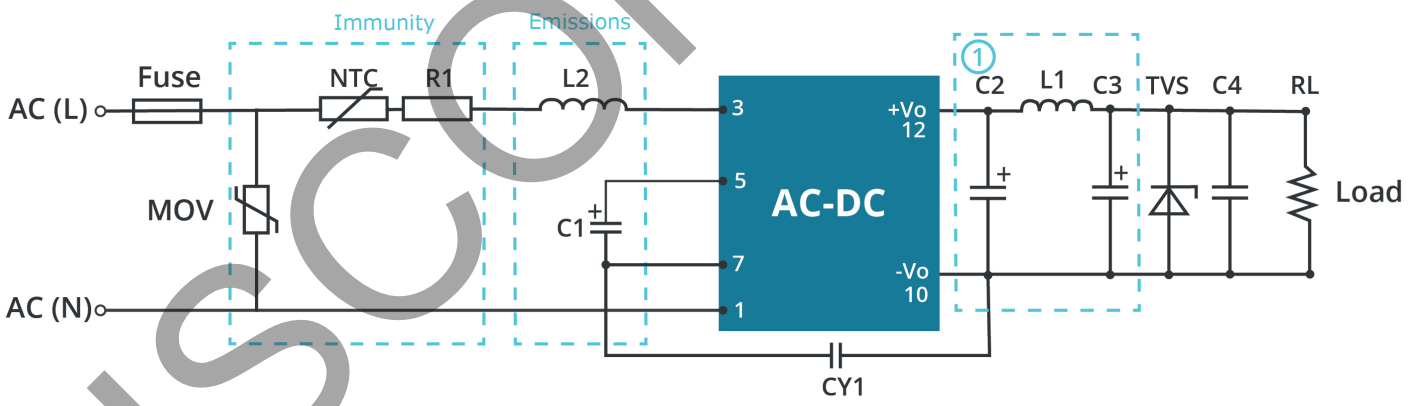

Table 2

Application enviromental	Ambient temperature range	Immunity Class	Emissions Class
Basi application	-40°C ~ 85°C	Class III	Class A

Component	Recommended value
R1	12Ω/2W
L2	4.7mH
NTC	13D-5
MOV	S14K350
FUSE (required)	1A/300V, slow-blow

DISCONTINUED

EMC RECOMMENDED CIRCUIT (CONTINUED)

Circuit 3

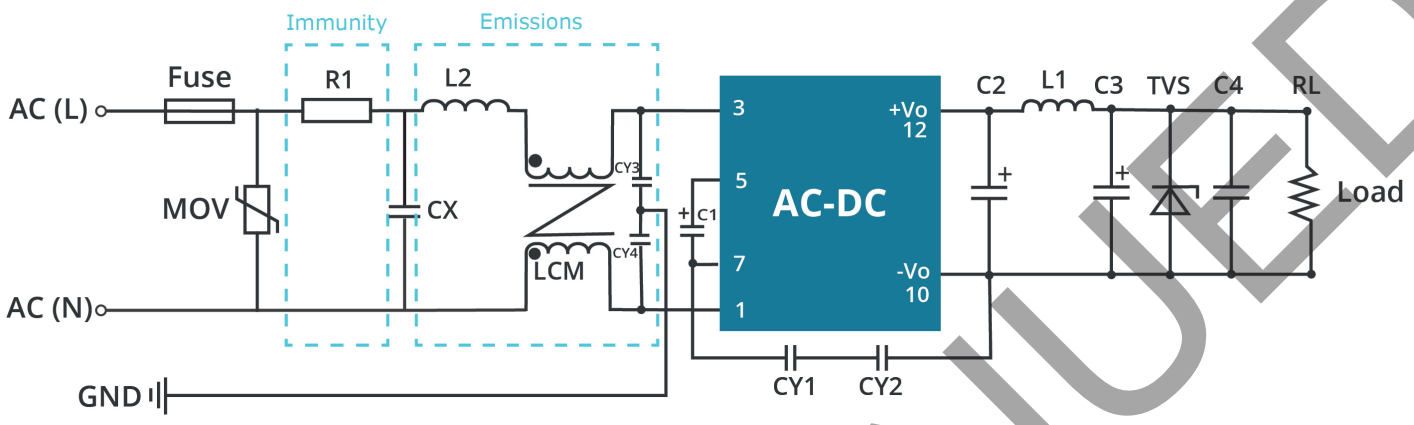

Table 3

Application enviromental	Ambient temperature range	Immunity Class	Emissions Class
Indoor civil / general	-40°C ~ 55°C	Class III	Class B

Component	Recommended value
R1	12Ω/3W
CY1 (CY2)	1.0nF/400Vac
LCM	3.5mH
LDM	0.33mH
CX	0.1μF/310Vac
CY3, CY4	0.56nF/400Vac
FUSE (required)	1A/300V, slow-blow

Note: In the home appliance application enviroment, the two Y capacitors of the primary and secondary need to be externally connected (CY1/CY2, value at 2.2nF/400Vac) which can meet the EN60335 certification. In other industries, only one Y capacitor is required.

DISCONTINUED

EMC RECOMMENDED CIRCUIT (CONTINUED)

Circuit 4

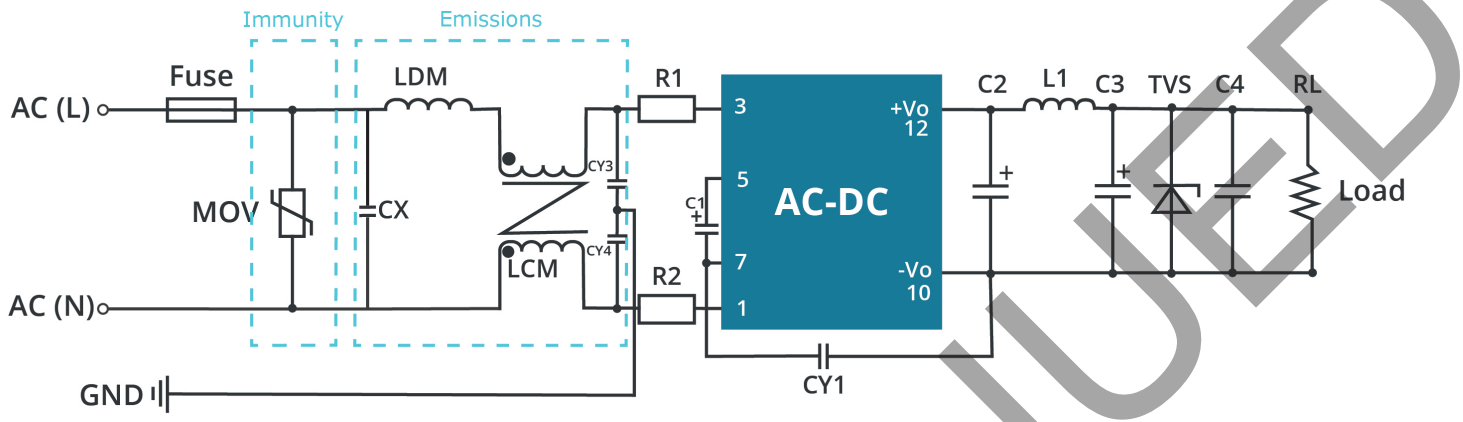

Table 4

Application enviromental	Ambient temperature range	Immunity Class	Emissions Class
Indoor industrial	-25°C ~ 55°C	Class IV	Class B

Component	Recommended value
MOV	S14K350
C1	450V/22uF
CY1	2.2nF/400Vac
CX	0.1μF/310Vac
LCM	3.5mH
LDM	0.33mH
R1, R2	12Ω/2W
CY3, CY4	0.56nF/400Vac
FUSE (required)	2A/300V, slow-blow

DISCONTINUED

EMC RECOMMENDED CIRCUIT (CONTINUED)

Circuit 5

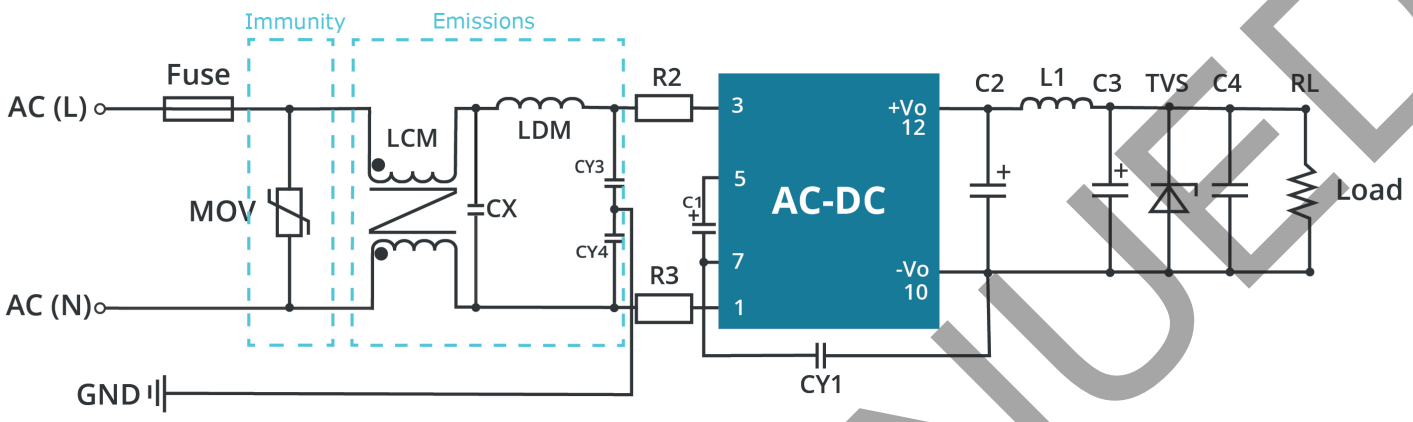

Table 5

Application enviromental	Ambient temperature range	Immunity Class	Emissions Class
Indoor industrial	-25°C ~ 55°C	Class IV	Class B

Component	Recommended value
MOV	S14K350
C1	450V/22uF
CY1	2.2nF/400Vac
CY3/CY4	0.56μF/400Vac
CX	0.1μF/310Vac
LCM	3.5mH
LDM	0.33mH
R2/R3	12Ω/2W
FUSE (required)	2A/300V, slow-blow

DISCONTINUED

EMC RECOMMENDED CIRCUIT (CONTINUED)

Circuit 6

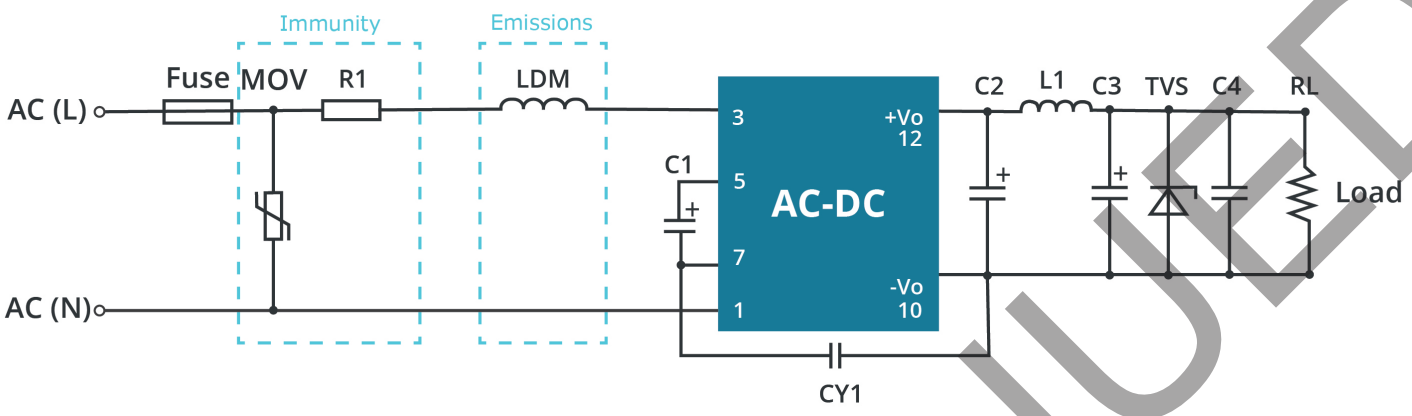

Table 6

Application enviromental	Ambient temperature range	Immunity Class	Emissions Class
Outdoor general enviroment	-40°C ~ 85°C	Class IV	Class A

Component	Recommended value
MOV	S14K350
C1	450V/22uF
LDM	4.7mH
R1	12Ω/3W
FUSE (required)	2A/300V, slow-blow

DISCONTINUED

REVISION HISTORY

rev.	description	date
1.0	initial release	10/18/2016
1.01	internal IC changed	05/11/2017
1.02	updated efficiency curves	02/05/2018
1.03	datasheet update, safety approvals updated to match 62368 certification, PCN-656-95022R-01	10/12/2020
1.04	product image updated	09/16/2021
1.05	derating curves updated	01/18/2022
1.06	product image updated	03/10/2022
1.07	UKCA mark added	05/25/2022
1.08	discontinued models PBO-3-S3.3, PBO-3-S3.3-B, PBO-3-S5, PBO-3-S5-B, PBO-3-S9, PBO-3-S12, PBO-3-S12-B, PBO-3-S15, PBO-3-S15-B, PBO-3-S24, PBO-3-S24-B	09/13/2022

The revision history provided is for informational purposes only and is believed to be accurate.

DISCONTINUED

CUI INC
a bel group

Headquarters
20050 SW 112th Ave.
Tualatin, OR 97062
800.275.4899

Fax 503.612.2383
cui.com
techsupport@cui.com

CUI offers a two (2) year limited warranty. Complete warranty information is listed on our website.

CUI reserves the right to make changes to the product at any time without notice. Information provided by CUI is believed to be accurate and reliable. However, no responsibility is assumed by CUI for its use, nor for any infringements of patents or other rights of third parties which may result from its use.

CUI products are not authorized or warranted for use as critical components in equipment that requires an extremely high level of reliability. A critical component is any component of a life support device or system whose failure to perform can be reasonably expected to cause the failure of the life support device or system, or to affect its safety or effectiveness.