CUI INC®

MODEL: SMI-CN-1 | **DESCRIPTION:** CHINA BLADE

DISCONTINUED

FEATURES

- level VI efficiency
- China interchangeable blade
- compatible with SMI6 series

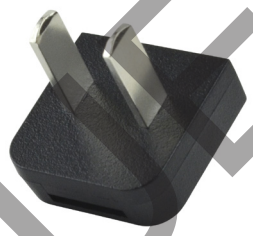

RoHS

MECHANICAL DRAWING

units: mm

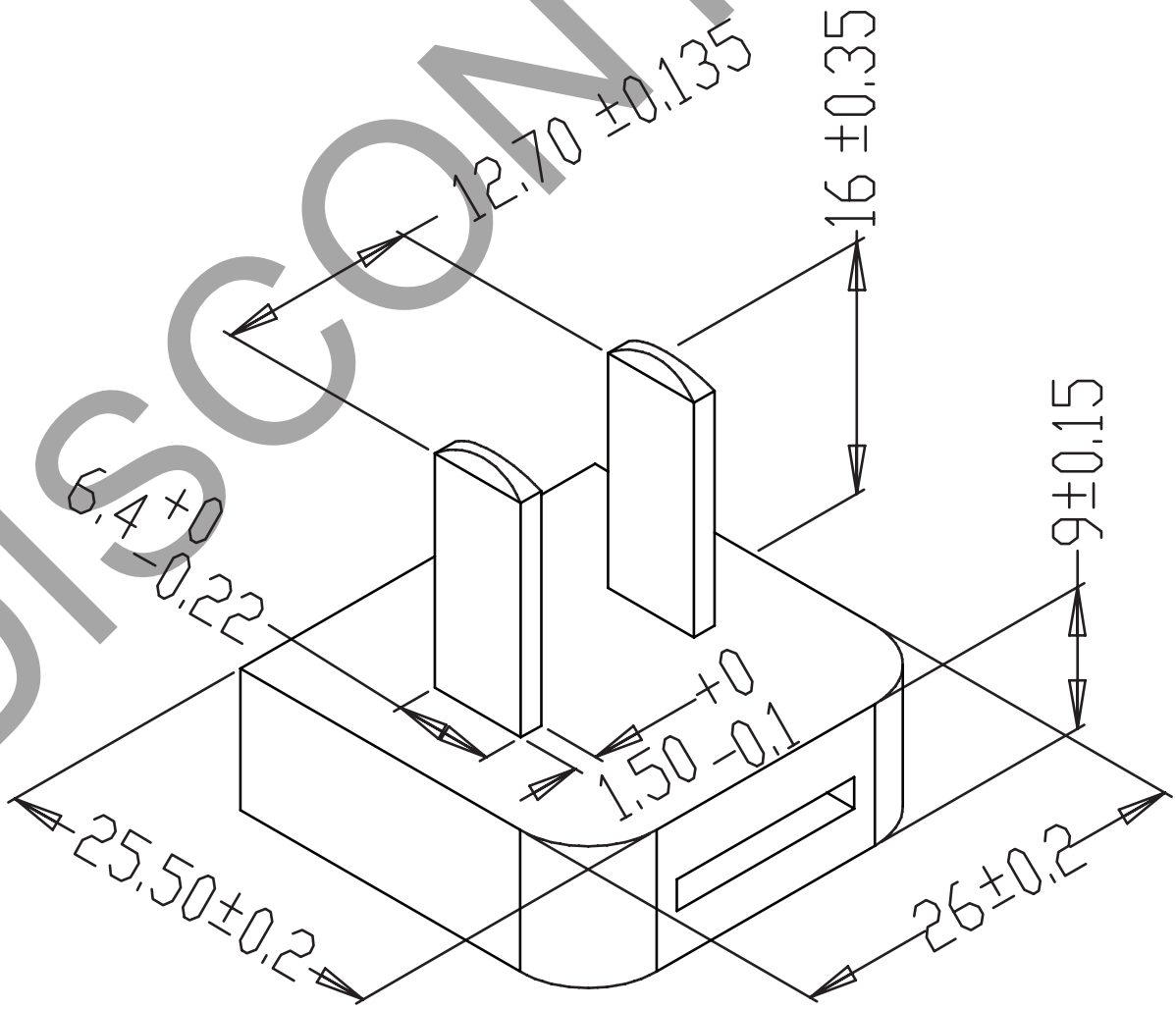

REVISION HISTORY

rev.	description	date
1.0	initial release	12/21/2015

The revision history provided is for informational purposes only and is believed to be accurate.

DISCONTINUED

CUI INC®

Headquarters
20050 SW 112th Ave.
Tualatin, OR 97062
800.275.4899

Fax 503.612.2383
cui.com
techsupport@cui.com

CUI offers a one (1) year limited warranty. Complete warranty information is listed on our website.

CUI reserves the right to make changes to the product at any time without notice. Information provided by CUI is believed to be accurate and reliable. However, no responsibility is assumed by CUI for its use, nor for any infringements of patents or other rights of third parties which may result from its use.

CUI products are not authorized or warranted for use as critical components in equipment that requires an extremely high level of reliability. A critical component is any component of a life support device or system whose failure to perform can be reasonably expected to cause the failure of the life support device or system, or to affect its safety or effectiveness.