CUI INC
a bel group

SERIES: VHK50W | DESCRIPTION: DC-DC CONVERTER

FEATURES

- up to 50 W isolated output
- rugged metal enclosure with integrated heat sink
- 4:1 input range (9~36 Vdc, 18~75 Vdc)
- single output from 3.3~48 Vdc
- 1,500 Vdc isolation
- over current, over temperature, over voltage, and short circuit protections
- remote on/off
- efficiency up to 83%

MODEL	input voltage range (Vdc)	output voltage (Vdc)	output current max (A)	output power max (W)	ripple and noise[1] max (mVp-p)	efficiency typ (%)
VHK50W-Q24-S3R3	9 ~ 36	3.3	10	33	100	75
VHK50W-Q24-S5	9 ~ 36	5	10	50	100	79
VHK50W-Q24-S12	9 ~ 36	12	4.16	50	150	82
VHK50W-Q24-S15	9 ~ 36	15	3.33	50	150	82
VHK50W-Q24-S24	9 ~ 36	24	2.08	50	240	82
VHK50W-Q24-S28	9 ~ 36	28	1.78	50	280	82
VHK50W-Q24-S48	9 ~ 36	48	1.04	50	480	82
VHK50W-Q48-S3R3	18 ~ 75	3.3	10	33	100	76
VHK50W-Q48-S5	18 ~ 75	5	10	50	100	80
VHK50W-Q48-S12	18 ~ 75	12	4.16	50	150	83
VHK50W-Q48-S15	18 ~ 75	15	3.33	50	150	83
VHK50W-Q48-S24	18 ~ 75	24	2.08	50	240	83
VHK50W-Q48-S28	18 ~ 75	28	1.78	50	280	83
VHK50W-Q48-S48	18 ~ 75	48	1.04	50	480	83

Note: 1. Ripple and noise are measured at full load, 20 MHz BW with 10μF tantalum capacitor and 1μF ceramic capacitor across output. The 48 Vdc output models only require the 1μF ceramic capacitor across the output.

PART NUMBER KEY

VHK50W - QXX - SXXX

- VHK50W: Base Number
- QXX: Input Voltage
- SXXX: Output Voltage
- S: Remote On/Off Control
  - "blank" = positive logic
  - N = negative logic

INPUT

parameter	conditions/description		min	typ	max	units
operating input voltage	24 Vdc input models 48 Vdc input models		9 18	24 48	36 75	Vdc Vdc
under voltage shutdown	24 Vdc input	power up power down		8.8 8		Vdc Vdc
	48 Vdc input	power up power down		17 16		Vdc Vdc
CTRL[1]	positive logic	models ON (open circuit)				
		models OFF (0~0.8 Vdc)				
	negative logic	models ON (0~0.8 Vdc)				
		models OFF (open circuit)				
filter	pi filter					
input fuse	15A time delay fuse for 24 Vin models, 8A time delay fuse for 48 Vin models					

Note: 1. Open collector refer to -Vin

OUTPUT

parameter	conditions/description	min	typ	max	units
maximum capacitive load	3.3 and 5 V output models 12 V output models 15 V output models 24 V output models 28 V output models 48 V output models	 47		10,000 4,160 3,330 2,080 1,780 1,040	µF µF µF µF µF µF
line regulation[2]	measured from high line to low line			±0.2	%
load regulation[2]	measured from full load to zero load			±0.2	%
voltage accuracy[2]				±1	%
adjustability			±10		%
switching frequency			300		kHz
transient response	25% step load change			500	µs
temperature coefficient			±0.03		%/°C

Note: 2. A 47 µF aluminum capacitor is required on the output for 48 Vdc output models.

PROTECTIONS

parameter	conditions/description	min	typ	max	units
short circuit protection	continuous				
over current protection	% nominal output current	110		160	%
over voltage protection		115		140	%
over temperature protection	shutdown restart threshold		100 70		°C °C

SAFETY AND COMPLIANCE

parameter	conditions/description	min	typ	max	units
isolation voltage	for 1 min: input/output; input/case; output/case	1,500			Vdc
isolation resistance		10			MΩ
RoHS	2011/65/EU (CE)				

ENVIRONMENTAL

parameter	conditions/description	min	typ	max	units
operating temperature	see derating curve	-40		85	°C
storage temperature		-55		105	°C

MECHANICAL

parameter	conditions/description	min	typ	max	units
dimensions	4.23 x 4.01 x 1.50 [107.5 x 101.8 x 38.0 mm]				inch
case material	steel and aluminum extrusion				
weight			502		g

MECHANICAL DRAWING

units: inch[mm]
general tolerance: ±0.04[±1.0]

wire range: 22~12 AWG
screw size: #6-32
connector tightening torque: 1.4 N·m (max)

PIN CONNECTIONS	
PIN	FUNCTION
1	-Vo
2	-S
3	trim
4	+S
5	+Vo
6	case
7	on/off
8	-Vin
9	+Vin

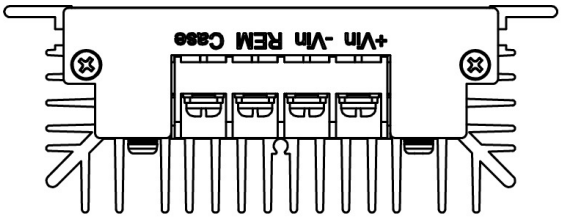

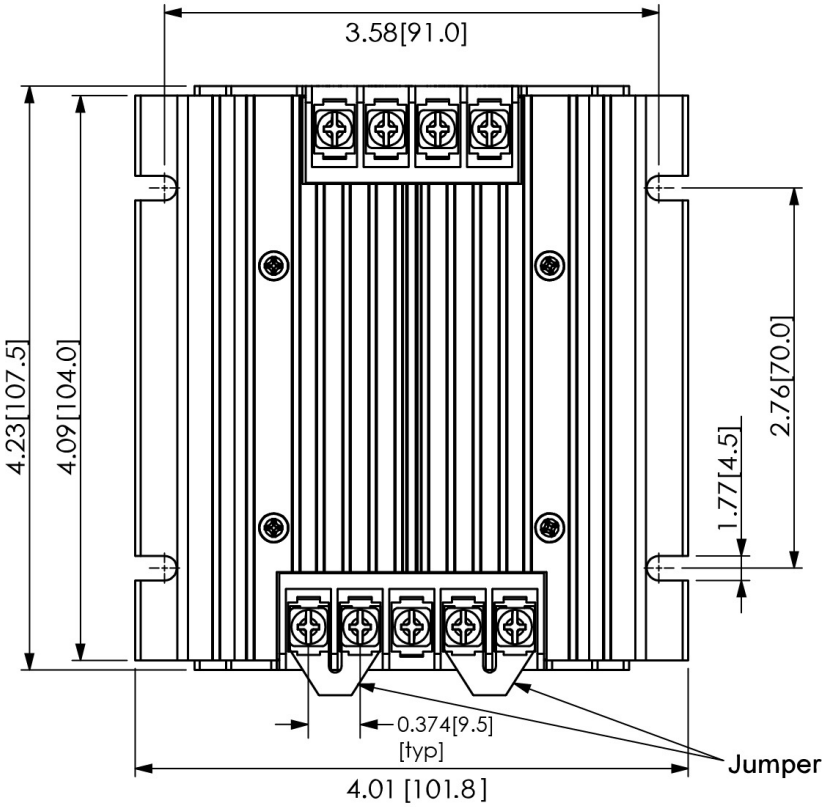

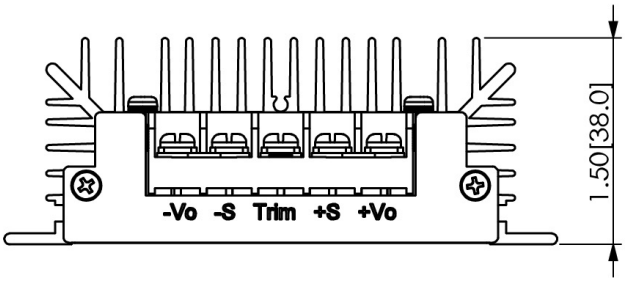

DERATING CURVES

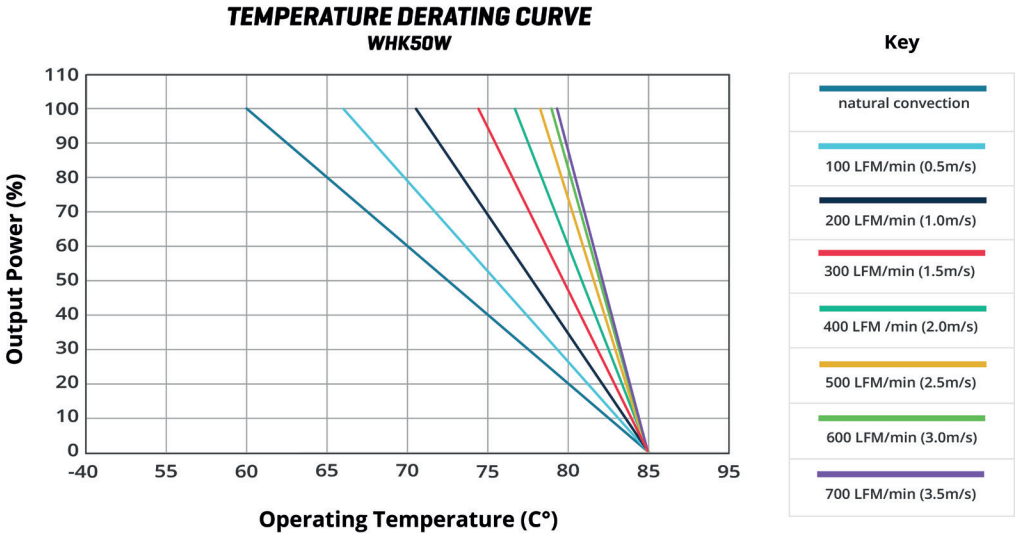

TEST CONFIGURATION

Figure 1

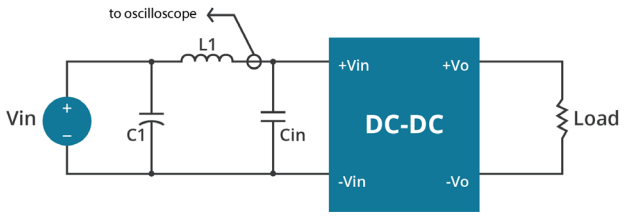

Table 1

External components	
L1	12μH
C1	220μF, ESR < 0.1Ω at 100 KHz
Cin	100μF, ESR < 0.1Ω at 100 KHz

Note: Input reflected-ripple current is measured with an inductor L1 and Capacitor C1 to simulate source impedance.

EMC RECOMMENDED CIRCUITS

EN55022 CLASS A

Figure 2
Recommended Circuit for EN55022 Class A
(for all 3.3, 5, 12, 15, 24, & 28 Vdc output models)

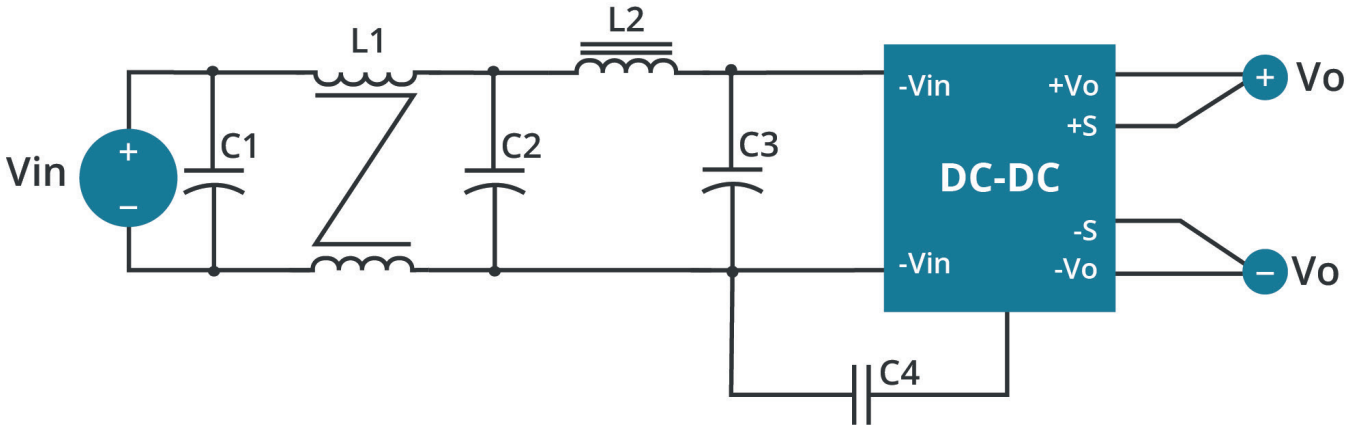

EMC RECOMMENDED CIRCUITS (CONTINUED)

EN55022 CLASS A

Figure 3
Recommended Circuit for EN55022 Class A
(for all 48 Vdc output models)

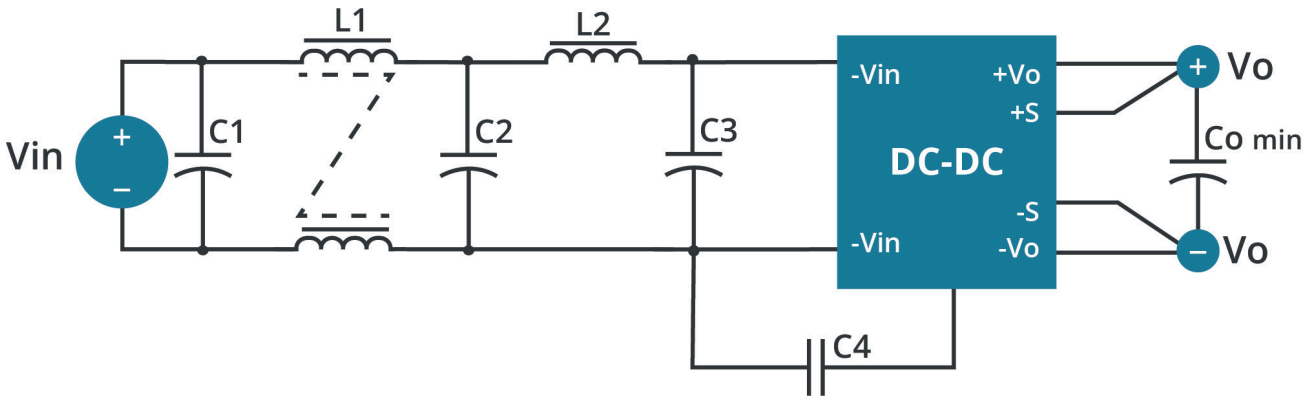

Table 2
Class A Recommended Components

Model	C1[1]	C2[2]	C3[2]	C4[1]	L1	L2	Co min.
VHK50W-Q24-S3R3	NC	100 µF/50 V	100 µF/50 V	2200 pF/2 kV	Short	3.5 µH	NC
VHK50W-Q24-S5	NC	100 µF/50 V	100 µF/50 V	2200 pF/2 kV	Short	3.5 µH	NC
VHK50W-Q24-S12	NC	100 µF/50 V	100 µF/50 V	2200 pF/2 kV	Short	3.5 µH	NC
VHK50W-Q24-S15	NC	100 µF/50 V	100 µF/50 V	2200 pF/2 kV	Short	3.5 µH	NC
VHK50W-Q24-S24	10 µF/50 V	100 µF/50 V	100 µF/50 V	NC	1.5 mH	3.4 µH	NC
VHK50W-Q24-S28	NC	100 µF/50 V	100 µF/50 V	2200 pF/2 kV	Short	3.4 µH	NC
VHK50W-Q24-S48	NC	100 µF/50 V	100 µF/50 V	NC	Short	3.5 µH	47 µF
VHK50W-Q48-S3R3	NC	47 µF/100 V	47 µF/100 V	2200 pF/2 kV	Short	3.4 µH	NC
VHK50W-Q48-S5	NC	47 µF/100 V	47 µF/100 V	2200 pF/2 kV	Short	3.4 µH	NC
VHK50W-Q48-S12	NC	47 µF/100 V	47 µF/100 V	2200 pF/2 kV	Short	3.4 µH	NC
VHK50W-Q48-S15	NC	47 µF/100 V	47 µF/100 V	2200 pF/2 kV	Short	3.4 µH	NC
VHK50W-Q48-S24	NC	47 µF/100 V	47 µF/100 V	2200 pF/2 kV	Short	3.4 µH	NC
VHK50W-Q48-S28	NC	100 µF/100 V	100 µF/100 V	2200 pF/2 kV	Short	3.4 µH	NC
VHK50W-Q48-S48	NC	47 µF/100 V	47 µF/100 V	2200 pF/2 kV	Short	3.5 µH	47 µF

Note: 1. Ceramic capacitors
2. Aluminum capacitors

EMC RECOMMENDED CIRCUITS (CONTINUED)

EN55022 CLASS B

Figure 4
Recommended Circuit for EN55022 Class B
(for all 3.3, 5, 12, 15, & 24 Vdc output models)

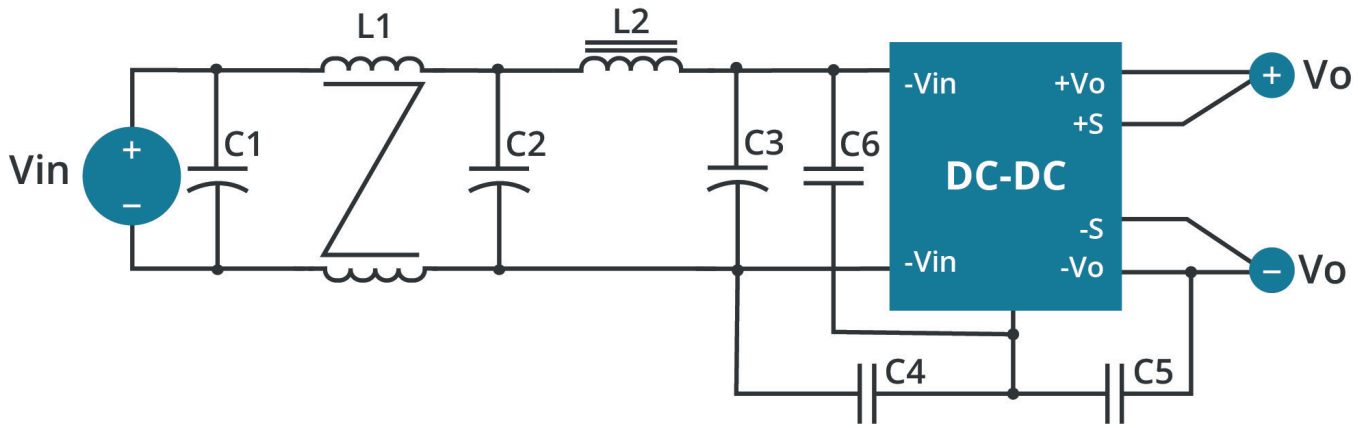

Figure 5
Recommended Circuit for EN55022 Class B
(for all 28 Vdc output models)

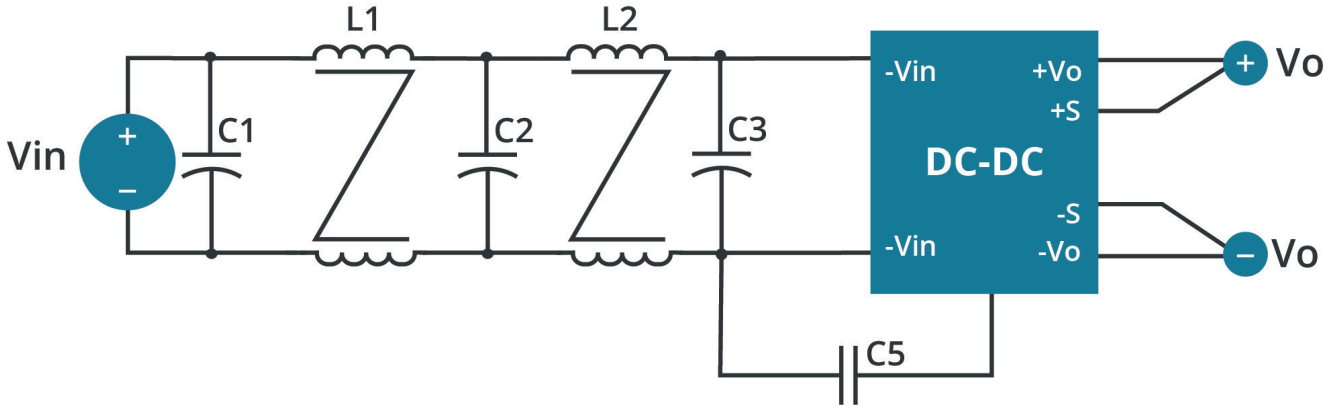

Figure 6
Recommended Circuit for EN55022 Class B
(for all 48 Vdc output models)

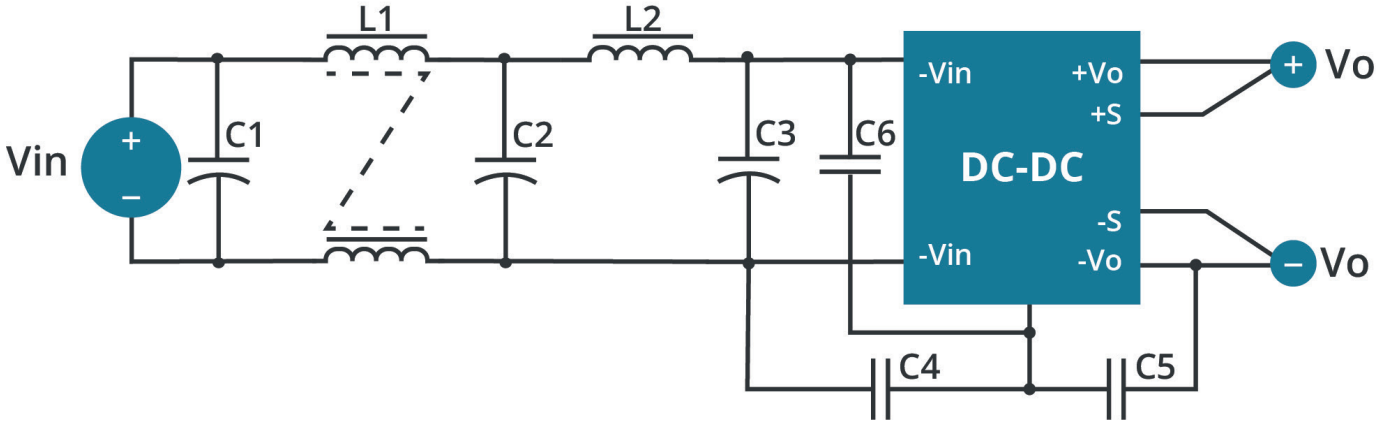

EMC RECOMMENDED CIRCUITS (CONTINUED)

EN55022 CLASS B

Table 3
Class B Recommended Components

Model	C1[2]	C2[2]	C3[2]	C4[1]	C5[1]	C6[1]	L1	L2	Co min.
VHK50W-Q24-S3R3	100 µF/50 V	100 µF/50 V	100 µF/50 V	3300 pF/2 kV	NC	NC	0.65 mH	1.5 µH	NC
VHK50W-Q24-S5	100 µF/50 V	100 µF/50 V	100 µF/50 V	2200 pF/2 kV	NC	NC	0.65 mH	1.5 µH	NC
VHK50W-Q24-S12	100 µF/50 V	100 µF/50 V	100 µF/50 V	3300 pF/2 kV	NC	NC	0.65 mH	1.5 µH	NC
VHK50W-Q24-S15	100 µF/50 V	100 µF/50 V	100 µF/50 V	2200 pF/2 kV	NC	NC	0.65 mH	1.5 µH	NC
VHK50W-Q24-S24	10 µF/50 V[1]	100 µF/50 V	100 µF/50 V	2200 pF/2 kV	3300 pF/2 kV	1000 pF/2 kV	1.5 mH	3.4 µH	NC
VHK50W-Q24-S28	100 µF/50 V	100 µF/50 V	NC	NC	1000 pF/2 kV	NC	0.12 mH	0.34 mH	NC
VHK50W-Q24-S48	10 µF/50 V[1]	100 µF/50 V	100 µF/50 V	4700 pF/2 kV	2200 pF/2 kV	1000 pF/2 kV	1.5 mH	3.4 µH	47 µF
VHK50W-Q48-S3R3	47 µF/100 V	47 µF/100 V	47 µF/100 V	3300 pF/2 kV	3300 pF/2 kV	1000 pF/2 kV	1.5 mH	3.4 µH	NC
VHK50W-Q48-S5	47 µF/100 V	47 µF/100 V	47 µF/100 V	3300 pF/2 kV	3300 pF/2 kV	1000 pF/2 kV	1.5 mH	3.4 µH	NC
VHK50W-Q48-S12	47 µF/100 V	47 µF/100 V	47 µF/100 V	3300 pF/2 kV	3300 pF/2 kV	1000 pF/2 kV	1.5 mH	3.4 µH	NC
VHK50W-Q48-S15	47 µF/100 V	47 µF/100 V	47 µF/100 V	3300 pF/2 kV	3300 pF/2 kV	1000 pF/2 kV	1.5 mH	3.4 µH	NC
VHK50W-Q48-S24	47 µF/100 V	47 µF/100 V	47 µF/100 V	3300 pF/2 kV	3300 pF/2 kV	1000 pF/2 kV	1.5 mH	3.4 µH	NC
VHK50W-Q48-S28	100 µF/100 V	100 µF/100 V	NC	NC	1000 pF/2 kV	NC	0.12 mH	0.34 mH	NC
VHK50W-Q48-S48	47 µF/100 V	47 µF/100 V	47 µF/100 V	4700 pF/2 kV	2200 pF/2 kV	1000 pF/2 kV	1.5 mH	3.4 µH	47 µF

Note: 1. Ceramic capacitors
2. Aluminum capacitors

APPLICATION NOTES

1. **Output Voltage Trimming**
   Leave open if not used.

Figure 7

Trim up

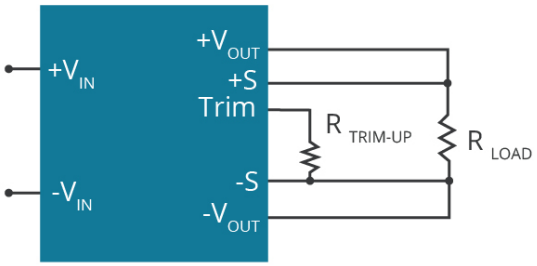

Trim down

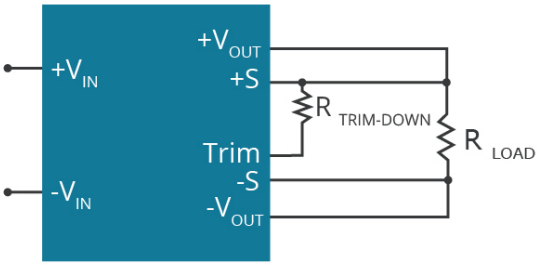

$$R_{TRIM} = \left(\frac{R_{TOP}\,(V_{REF} - V_F\,(\frac{R_{BOTTOM}}{R_{BOTTOM} + R_O}))}{V_{OUT} - V_{OUT,\,NOM}} \right) - \frac{R_{BOTTOM} R_O}{R_{BOTTOM} + R_O} \quad (K\,\Omega)$$

Formula for Trim up

$$R_{TRIM} = \frac{R_{TOP}\,(V_{OUT} - V_{REF})}{V_{OUT,\,NOM} - V_{OUT}} - R_{BOTTOM} \quad (K\,\Omega)$$

Formula for Trim down

Table 4

V_{NOM}	R_{TOP}	R_{BOTTOM}	R_O	V_{REF}	V_F
(Vdc)	(kΩ)	(kΩ)	(kΩ)	(V)	(V)
3.3	3	12	18	1.24	0.46
5	2.32	8.2	0	2.5	0
12	9.1	51	18	2.5	0.46
15	12	82	18	2.5	0.46
24	20	100	20	2.5	0.46
28	23.7	150	16	2.5	0.46
48	36	270	14	2.5	0.46

Note: Value for R_{TOP}, R_{BOTTOM}, R_O, V_{REF} ,and V_F refer to Table 4 (fixed internal values).
R_{TRIM}: Trim resistance
a: User-defined parameter, no actual meanings
V_{NOM}: Nominal output voltage
V_{OUT}: Target output voltage

Note: 1. All specifications are measured at Ta=25°C, nominal input voltage and full output load unless otherwise specified.

REVISION HISTORY

rev.	description	date
1.0	initial release	10/11/2006
1.01	new template applied	12/21/2011
1.02	misc. updates and corrections	03/13/2012
1.03	updated mechanical drawing	03/27/2012
1.04	V-Infinity branding removed	06/27/2012
1.05	updated spec	03/14/2013
1.06	added trimming and EMI information	12/17/2013
1.07	company logo updated	02/08/2021
1.08	derating curve and figures updated	06/09/2021
1.09	mechanical tolerances updated	04/13/2022
1.10	output voltage trimming updated	05/30/2023

The revision history provided is for informational purposes only and is believed to be accurate.

CUI INC
a bel group

Headquarters
20050 SW 112th Ave.
Tualatin, OR 97062
800.275.4899

Fax 503.612.2383
cui.com
techsupport@cui.com

CUI offers a two (2) year limited warranty. Complete warranty information is listed on our website.

CUI reserves the right to make changes to the product at any time without notice. Information provided by CUI is believed to be accurate and reliable. However, no responsibility is assumed by CUI for its use, nor for any infringements of patents or other rights of third parties which may result from its use.

CUI products are not authorized or warranted for use as critical components in equipment that requires an extremely high level of reliability. A critical component is any component of a life support device or system whose failure to perform can be reasonably expected to cause the failure of the life support device or system, or to affect its safety or effectiveness.