CUDEVICES

SERIES: CFM-40V | **DESCRIPTION:** DC AXIAL FAN

FEATURES

- omniCOOL™ bearing system
- 40 x 40 mm frame
- multiple speed options for different cooling needs
- tachometer signal and rotation detect options available
- auto restart protection standard on all models

MODEL

	input voltage		input current[1]	input power[1]	rated speed[1]	air flow[2]	static pressure[3]	noise[4]
	rated (Vdc)	range (Vdc)	max (mA)	max (W)	typ (RPM±15%)	(CFM)	(inch H_2O)	max (dBA)
CFM-4010V-058-206	5	3.5~6	109	0.55	5800	7.0	0.12	20.6
CFM-4010V-070-273	5	3.5~6	157	0.79	7000	8.0	0.19	27.3
CFM-4010V-150-157	12	4.5~13.8	38	0.46	5000	5.4	0.09	15.7
CFM-4010V-158-206	12	6~13.8	48	0.58	5800	7.0	0.12	20.6
CFM-4010V-170-273	12	4.5~13.8	59	0.71	7000	8.0	0.19	27.3
CFM-4010V-185-314	12	4.5~13.8	101	1.22	8500	9.9	0.25	31.4
CFM-4020V-050-165	5	3.5~6	87	0.44	5000	6.3	0.11	16.5
CFM-4020V-060-210	5	3.5~6	124	0.62	6000	7.7	0.17	21.0
CFM-4020V-070-255	5	3.5~6	173	0.87	7000	8.9	0.22	25.5
CFM-4020V-145-123	12	4.5~13.8	38	0.46	4500	5.5	0.10	12.3
CFM-4020V-150-165	12	4.5~13.8	46	0.56	5000	6.3	0.11	16.5
CFM-4020V-160-210	12	4.5~13.8	54	0.65	6000	7.7	0.17	21.0
CFM-4020V-170-255	12	4.5~13.8	67	0.81	7000	8.9	0.22	25.5
CFM-4020V-180-275	12	4.5~13.8	92	1.11	8000	10.8	0.29	27.5
CFM-4020V-260-210	24	8~27.6	30	0.72	6000	7.7	0.17	21.0
CFM-4020V-270-255	24	8~27.6	39	0.94	7000	8.9	0.22	25.5
CFM-4020V-280-275	24	8~27.6	45	1.08	8000	10.8	0.29	27.5

Notes:
1. At rated voltage, 25°C, 0 inch H_2O static pressure, after 10 minutes
2. As per AMCA 210 or DIN 24163, at rated voltage, stabilized RPM, 0 inch H_2O static pressure
3. As per AMCA 210 or DIN 24163, at rated voltage, stabilized RPM, 0 CFM airflow.
4. Measured in a semi-anechoic chamber with background noise < 15 dBA at 1 m from the fan intake.
5. All specifications are measured at 25°C, 65% relative humidity unless otherwise specified.

PART NUMBER KEY

CFM-4010V-058-206 - XX - CXX

- Base Number
- Fan Signals
  "blank" = no signals
  11 = rotation detector signal
  20 = tachometer signal
- Reserved for Custom Configurations

INPUT

parameter	conditions/description	min	typ	max	units
operating input voltage[1]	5 Vdc input models 12 Vdc input models 24 Vdc input models	3.5 4.5 8	5 12 24	6 13.8 27.6	Vdc Vdc Vdc
starting voltage[2]	5 Vdc input models 12 Vdc input models 24 Vdc input models		3.5 4.5 8		Vdc Vdc Vdc

Note: 1. See Model section on page 1 for specific input voltage ranges.
2. Starting voltage for model CFM-4010V-158-206 is 6 Vdc.

PERFORMANCE[3]

parameter	conditions/description	min	typ	max	units
rated speed	at rated voltage, 25°C, after 10 minutes	4500		8500	RPM
air flow	at 0 inch H_2O, see performance curves	5.4		10.8	CFM
static pressure	at 0 CFM, see performance curves	0.09		0.29	inch H_2O
noise	at 1 m	12.3		31.4	dBA

Note: 3. See Model section on page 1 for specific values.

PROTECTIONS / FEATURES[4]

parameter	conditions/description	min	typ	max	units
auto restart	on all models				
rotation detector signal	available on “11” models				
tachometer signal	available on “20” models				

Notes: 4. See Application Notes for details.

SAFETY & COMPLIANCE

parameter	conditions/description	min	typ	max	units
insulation resistance of frame	at 500 Vdc between internal stator and positive lead wire	10			MΩ
dielectric strength	apply 500 Vac for 1 minute between housing and positive lead wire				
safety approvals	UL/cUL 507, TUV (EN 60950-1)				
EMI/EMC	EN 61000-6-1:2007, EN 61000-6-3:2007+A1				
life expectancy	at 40°C, 65% RH		70,000		hours
RoHS	yes				

ENVIRONMENTAL

parameter	conditions/description	min	typ	max	units
operating temperature		-10		70	°C
storage temperature		-40		70	°C

PERFORMANCE CURVES

CFM-4010V-058-206

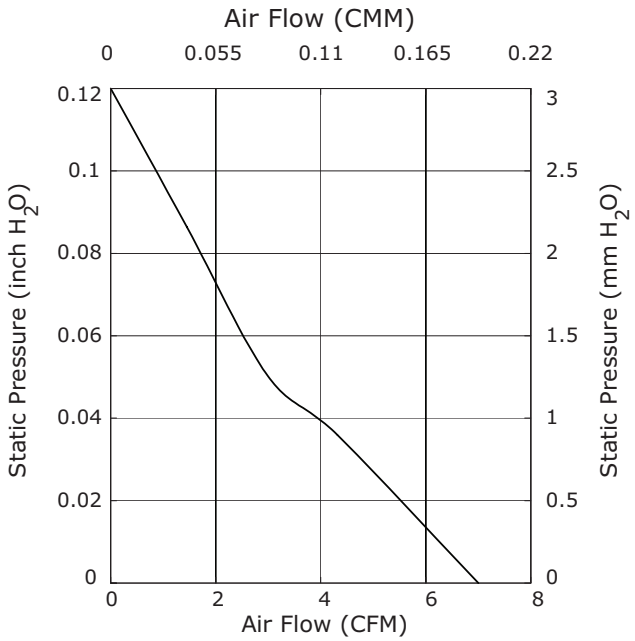

CFM-4010V-070-273

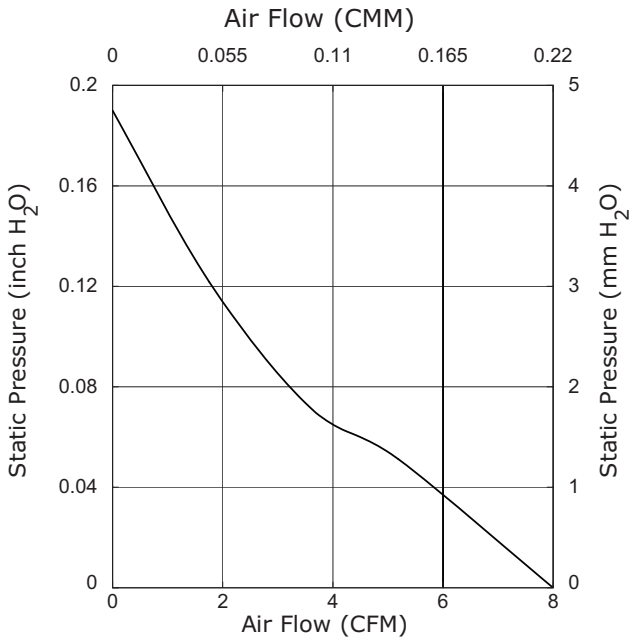

CFM-4010V-150-157

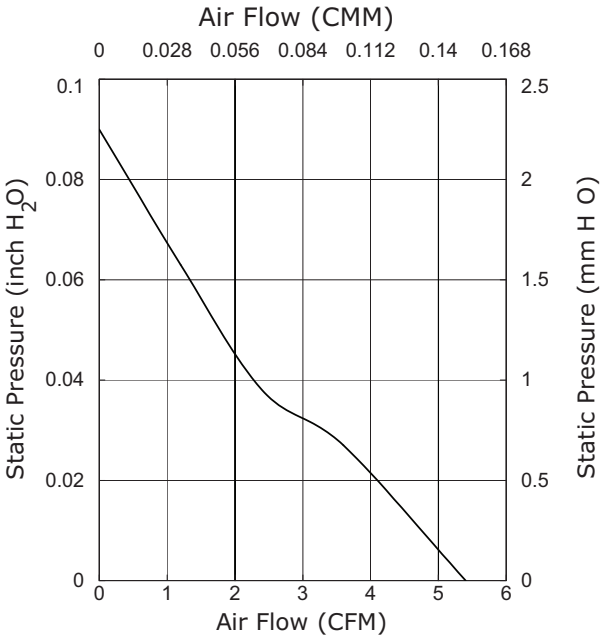

CFM-4010V-158-206

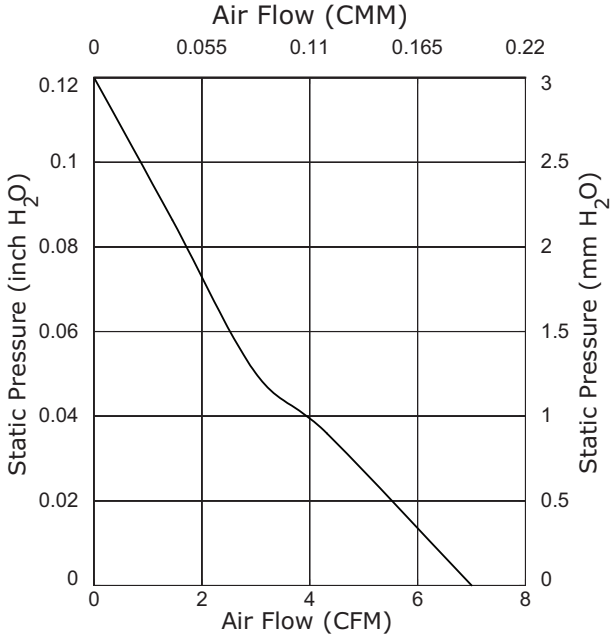

PERFORMANCE CURVES (CONTINUED)

CFM-4010V-170-273

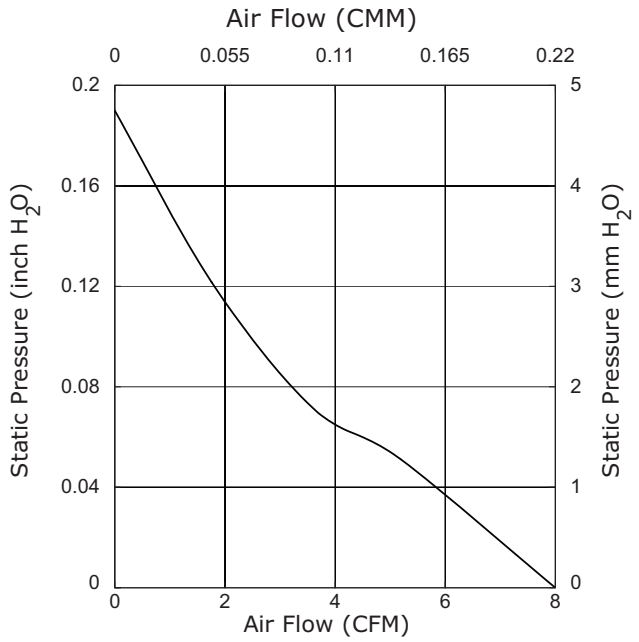

CFM-4010V-185-314

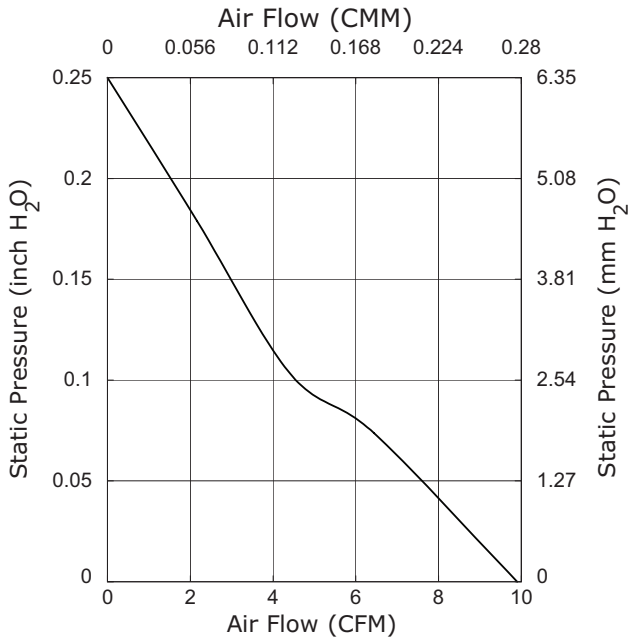

CFM-4020V-050-165

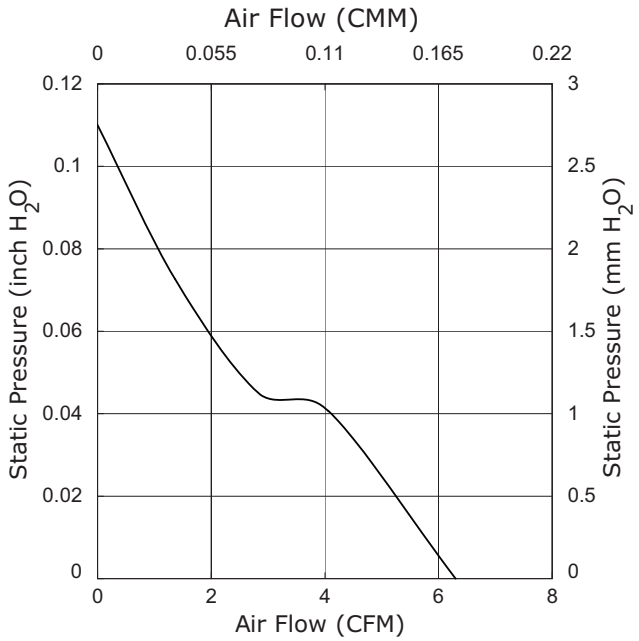

CFM-4020V-060-210

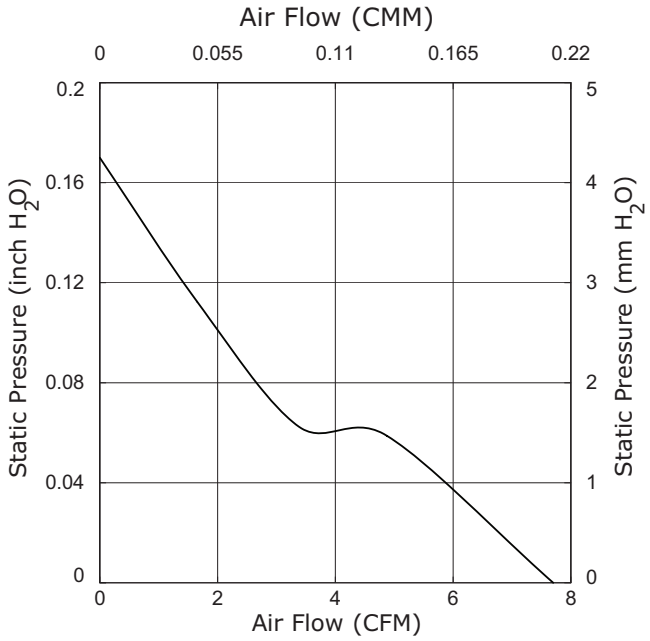

PERFORMANCE CURVES (CONTINUED)

CFM-4020V-070-255

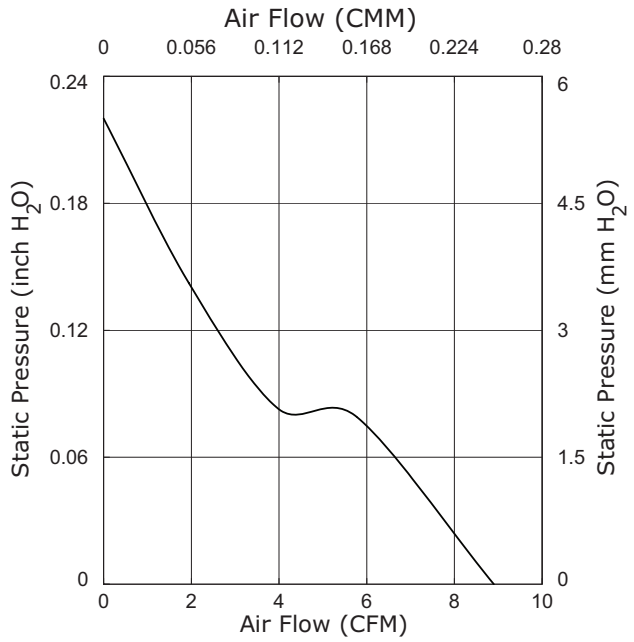

CFM-4020V-145-123

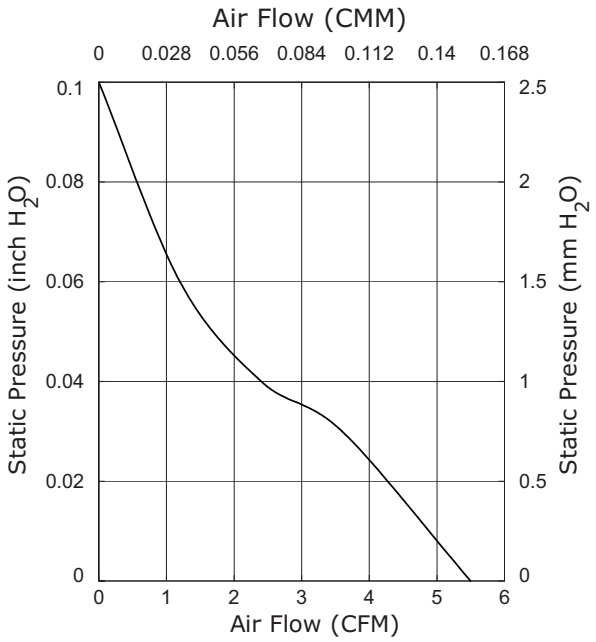

CFM-4020V-160-165

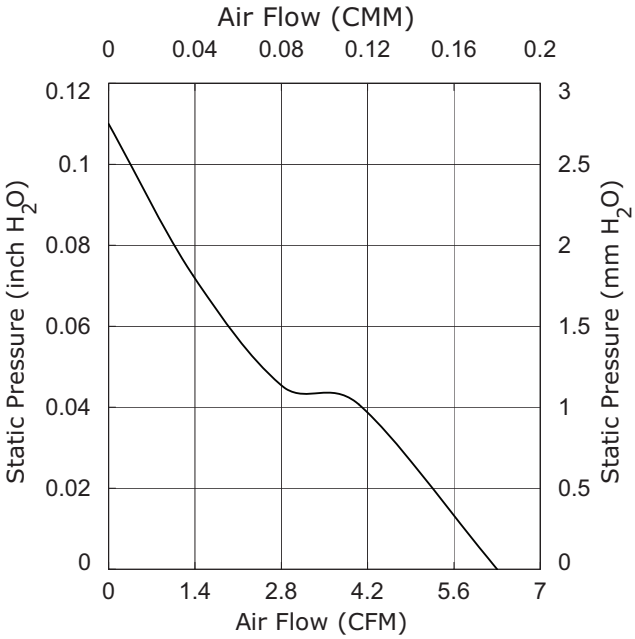

CFM-4020V-160-210

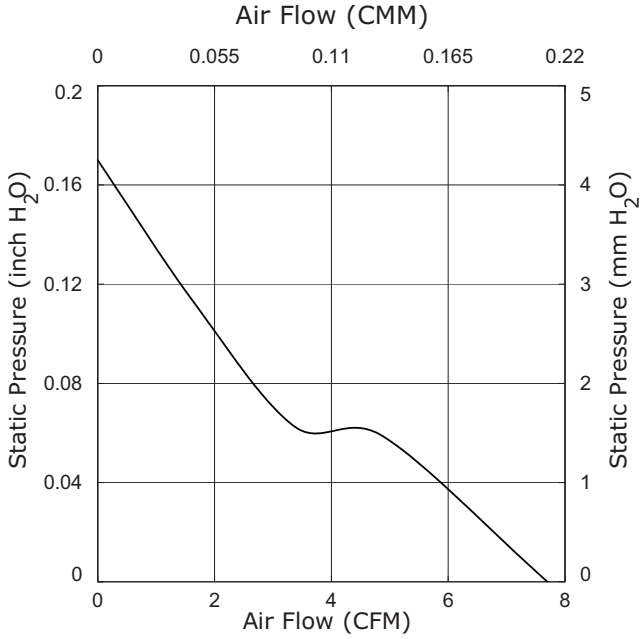

PERFORMANCE CURVES (CONTINUED)

CFM-4020V-170-255

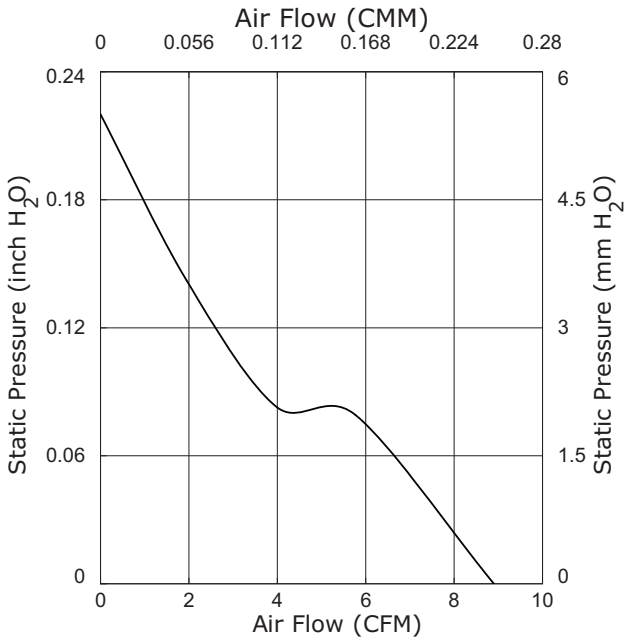

CFM-4020V-180-275

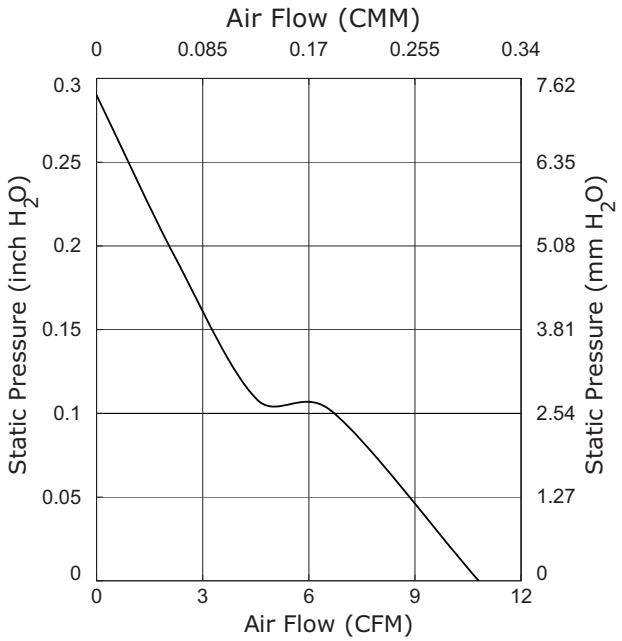

CFM-4020V-260-210

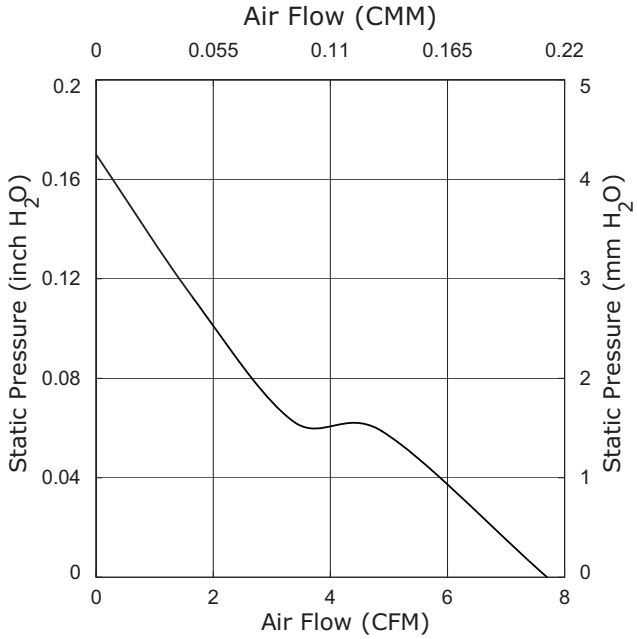

CFM-4020V-270-255

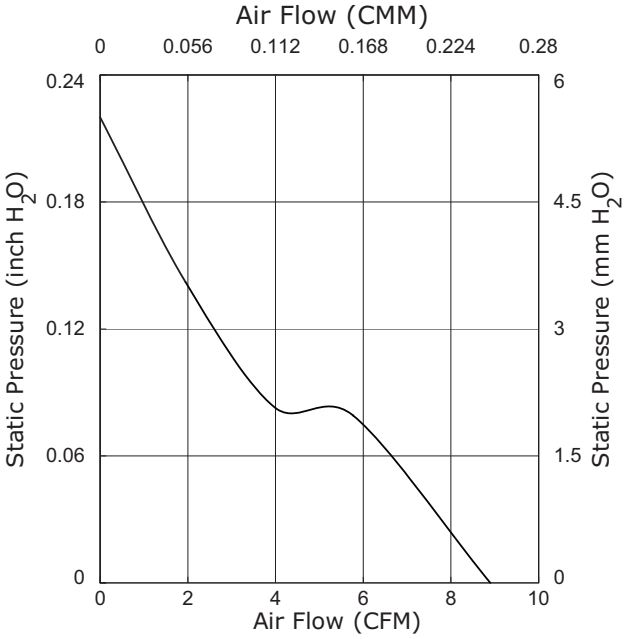

PERFORMANCE CURVES (CONTINUED)

CFM-4020V-280-275

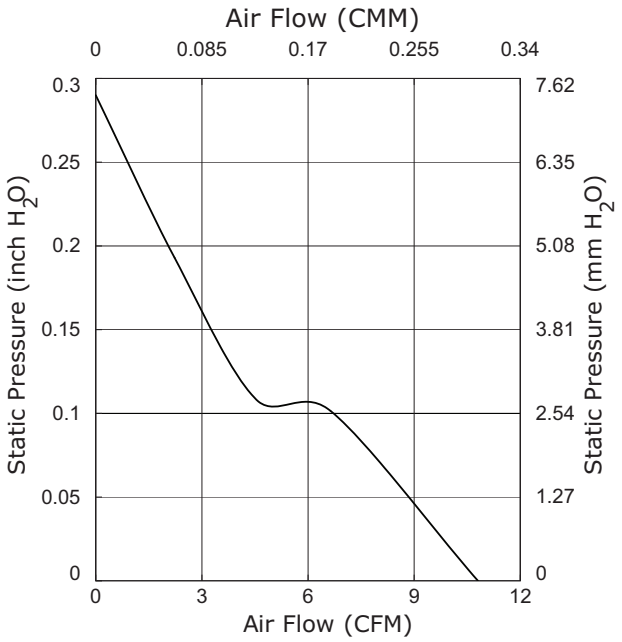

MECHANICAL

parameter	conditions/description	min	typ	max	units
motor	4 pole DC brushless				
bearing system	omniCOOL™				
direction of rotation	counter-clockwise viewed from front of fan blade				
dimensions	CFM-4010V models: 40 x 40 x 10 CFM-4020V models: 40 x 40 x 20				mm mm
material	PBT (UL94V-0)				
weight	CFM-4010V models CFM-4020V models		15.6 29		g g

MECHANICAL DRAWINGS

units: mm

wire: UL 1007, 26 AWG

MOUNTING SCREW (Pan Head)			
Screw Type	Size	Standard	Torque
Machine Screw	M4	JIS B1111-1974	3~4 kgf-cm
Self-tapping Screw	M5	JIS B1122 Type 2	6~8 kgf-cm

CFM-4010V

WIRE CONNECTIONS	
Wire Color	Function
Red	+Vin
Black	-Vin
White[1]	RD Signal
Yellow[1]	Tach Signal

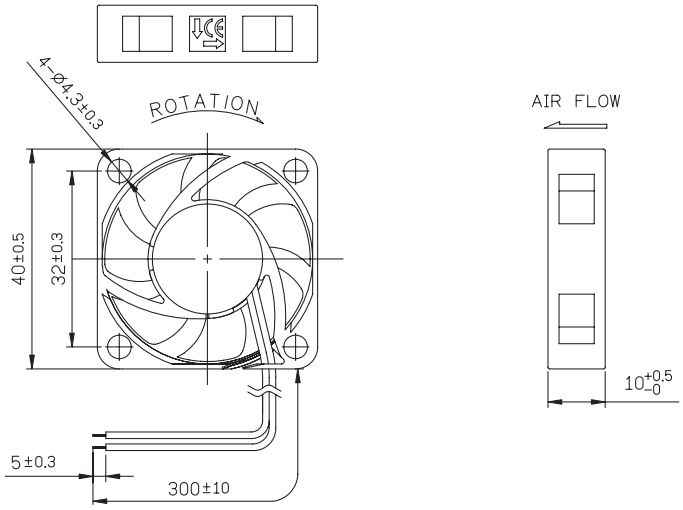

CFM-4020V

WIRE CONNECTIONS	
Wire Color	Function
Red	+Vin
Black	-Vin
White[1]	RD Signal
Yellow[1]	Tach Signal

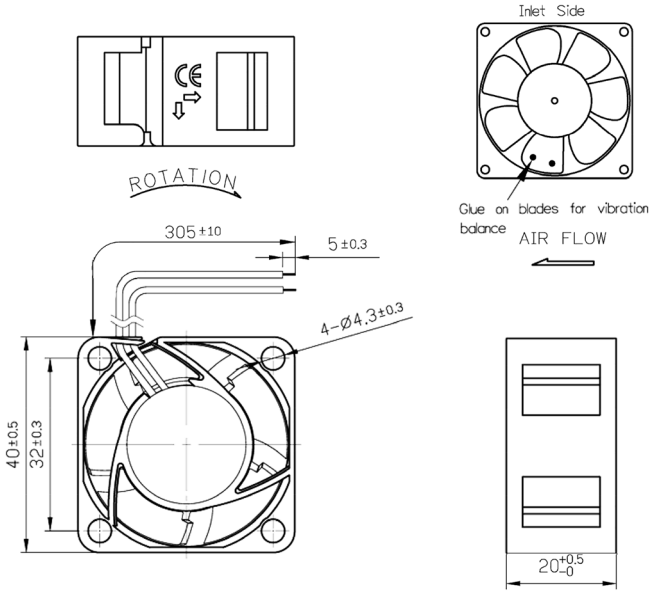

Notes: 1. Wires only present on versions with output signals.

APPLICATION NOTES

Auto Restart Protection

When the fan motor is locked by an external force, the device will temporarily turn off electrical power to the motor and restart automatically when the locked rotor condition is released.

Figure 1: Auto Start Protection

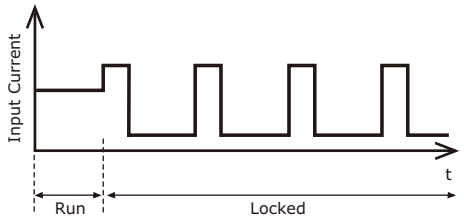

Rotation Detector Signal (White Wire)

The rotation detector signal is used to detect if the fan motor is operating or stopped. The output will be logical low (VL) when fan is operating and be logical high (Vcc) when fan motor is locked. (See Figures 2~3 below).

Figure 2: Rotation Detector Output Waveform

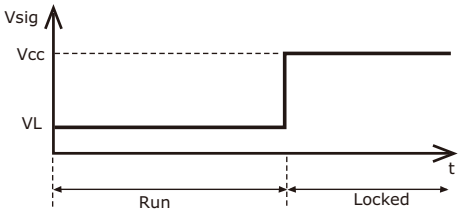

Figure 3: Rotation Detector Output Circuit

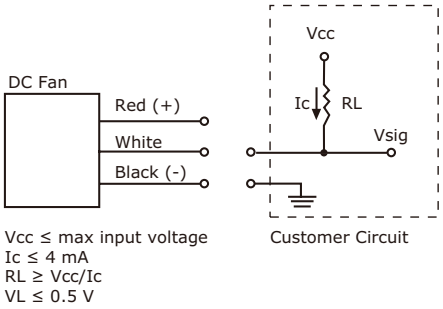

Tachometer Signal (Yellow Wire)

The tachometer signal is for detecting the rotational speed of the fan motor. The output will be a square wave when fan is operating and logical high (Vcc) when fan motor is locked (See Figures 4~5 below). The relationship between RPM & output pulses from the signal wire is as follows.

1 RPM = 2 Pulses

Figure 4: Tachometer Output Waveform

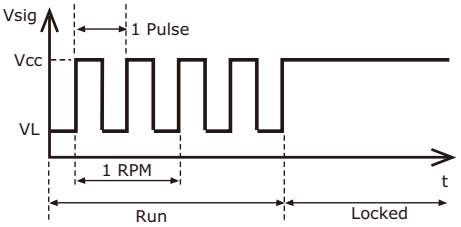

Figure 5: Tachometer Output Circuit

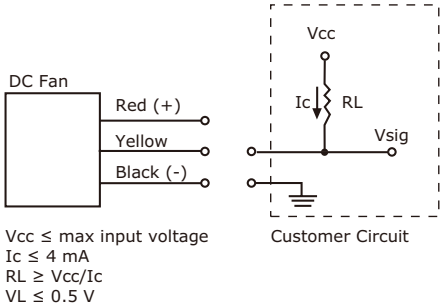

SAFETY CONSIDERATIONS

1. Do not use or operate this fan in excess of the limitations set forth in this specification. CUI is not responsible for the non-performance of this fan and/or any damages resulting from its use, if it is not used or operated in accordance with the specifications.
2. CUI recommends adding a protection circuit to the product or application in which this fan is installed, such as a thermo-fuse, or current fuse or thermo-protector. The failure to use such a device may result in smoke, fire, electric shock by insulation degradation in cases of motor lead short circuit, overload, or over voltage, and/or other failure.
3. CUI recommends installing a protection device to the product or application in which this fan is installed if there is a possibility of reverse connection between Vdc (+) and GND (-). The failue to install such a device may result in smoke, fire, and/or destruction, although these conditions may not manifest immediately.
4. This fan mush be installed and used in compliance with all applicable safety standards and regulations.
5. Use proper care when handling and/or installing this fan. Improper handling of installation of this fan may cause damage that could result in unsafe conditions.
6. Use proper care during installation and/or wiring. Failure to use proper care may cause damage to certain components of the fan including, but not limited to, the coil and lead wires, which could result in smoke and/or fire.
7. Do not use power or ground PWM to control the fan speed. If the fan speed needs to be adjusted, please contact CUI to customize the product design for your application.
8. For critical or extreme environments, including non-stop operation, please contact CUI and we will gladly provide assistance with your product selection to ensure an appropriate cooling product for your application.
9. When building your device, please examine thouroughly any variation of EMC, temperature rise, life data, quality, etc. of this product by shock/drop/vibration testing, etc. If there are any problems or accidents in connection with this product, it should be mutually discussed and examined.
10. Use proper care when handling these fans. Components such as fan holders or bearings may be damaged, if touched with fingers or other objects. Additionally, static electricity (ESD) may damage internal circuits of the fan.
11. Do not operate these fans in proximity to hazardous materials such as organic silicon, cyanogens, formalin, phenol, or corrosive gas environments including, but not limited to, H_2S, SO_2, NO_2, or Cl_2.
12. CUI recommends that you protect these fans from exposure to outside elements such as dust, condensation, humidity, or insects. Exposure of this fan to such elements may affect its performance and my cause safety hazards. CUI does not warrant against damage to the product caused by outside elements.
13. The fans must be installed properly and securely. Improper mounting may cause harsh resonance, vibration, and noise.
14. Do not store these fans in an environment with high humidity. These fans must be stored in accordance with the specified storage temperature.
15. CUI reserves the right to use components from multiple sources at its discretion. The use of components from other sources will not affect the specifications as described herein.
16. The life expectancy of these fans has not been evaluated for use in combination with any end application. Therefore, the life expectancy that relate to these fans are only for reference.

REVISION HISTORY

rev.	description	date
1.0	initial release	07/21/2017
1.01	brand update	02/07/2020
1.02	logo, datasheet style update	08/12/2022

The revision history provided is for informational purposes only and is believed to be accurate.

CUI Devices offers a one (1) year limited warranty. Complete warranty information is listed on our website.

CUI Devices reserves the right to make changes to the product at any time without notice. Information provided by CUI Devices is believed to be accurate and reliable. However, no responsibility is assumed by CUI Devices for its use, nor for any infringements of patents or other rights of third parties which may result from its use.

CUI Devices products are not authorized or warranted for use as critical components in equipment that requires an extremely high level of reliability. A critical component is any component of a life support device or system whose failure to perform can be reasonably expected to cause the failure of the life support device or system, or to affect its safety or effectiveness.