SERIES: MD | DESCRIPTION: MINI DIN CONNECTOR

FEATURES

- 3~9 pins
- plastic strain relief
- rated voltage: 100 Vac

PART NUMBER KEY

MD - XX

Base Number

Pin Options
30 = 3 pins
40 = 4 pins
50 = 5 pins
60 = 6 pins
70* = 7 pins
80 = 8 pins
90* = 9 pins

Note: *. Discontinued MD-70 & MD-90 models.

SPECIFICATIONS

parameter	conditions/description	min	typ	max	units
rated input voltage			100 12		Vac Vdc
rated input current	at 100 Vac at 12 Vdc			1 2	A A
contact resistance				30	mΩ
insulation resistance	at 250 Vdc	50			MΩ
voltage withstand	for 1 minute			250	Vac
insertion force				4.5	kg
withdrawal force		0.9		3	kg
operating temperature		-20		105	°C
life			5,000		cycles
RoHS	yes				

MECHANICAL DRAWINGS

units: mm[inches]

TOLERANCE: ±0.2mm

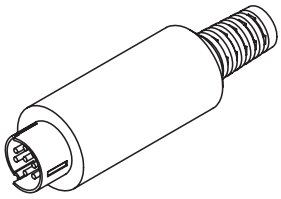

	MATERIAL	PLATING
shield	brass	nickel
pin contacts (1~9)	brass	silver
insulator	Polyamide 6 (PA-1010C2)	
shell	ABS (PA-757)	
cover	UE630 + PELL (LL120)	

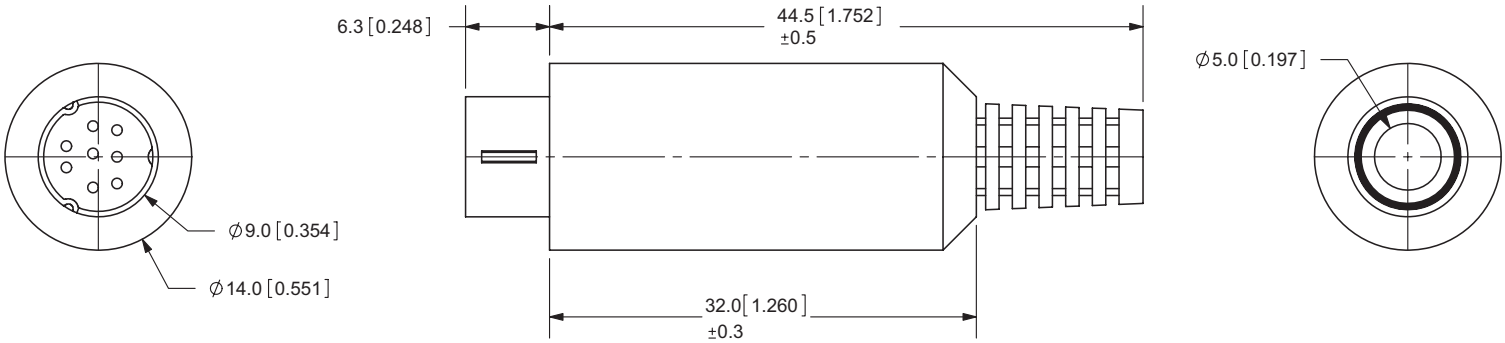

MD-30

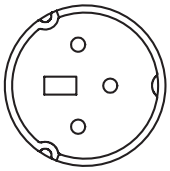

MD-40

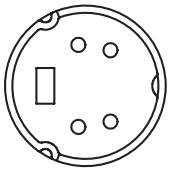

MD-50

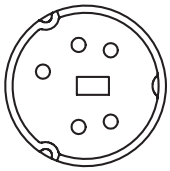

MD-60

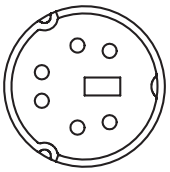

MD-70

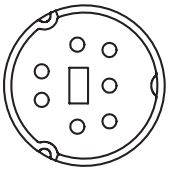

MD-80

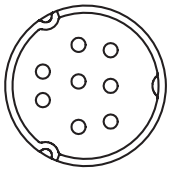

MD-90

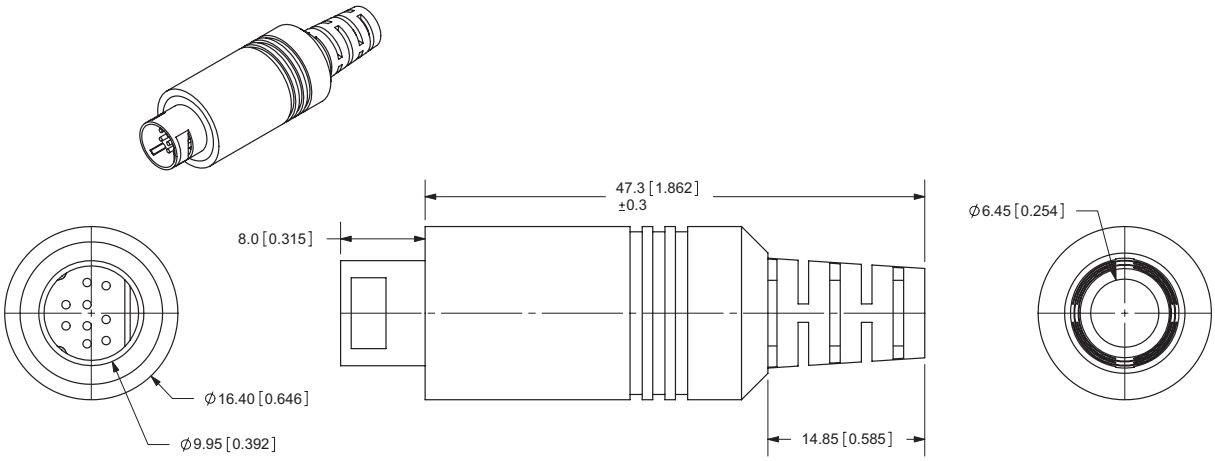

MECHANICAL ASSEMBLY

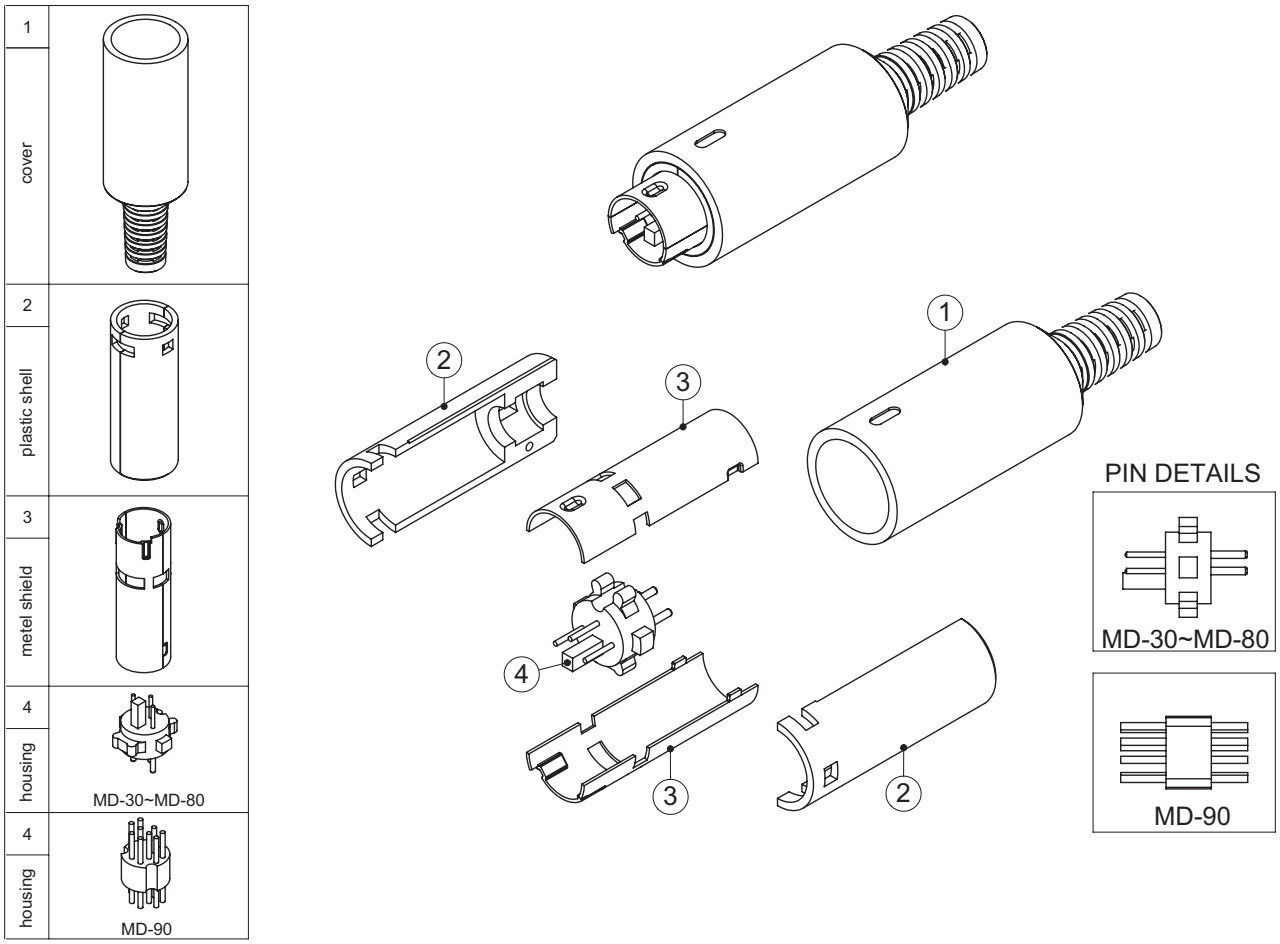

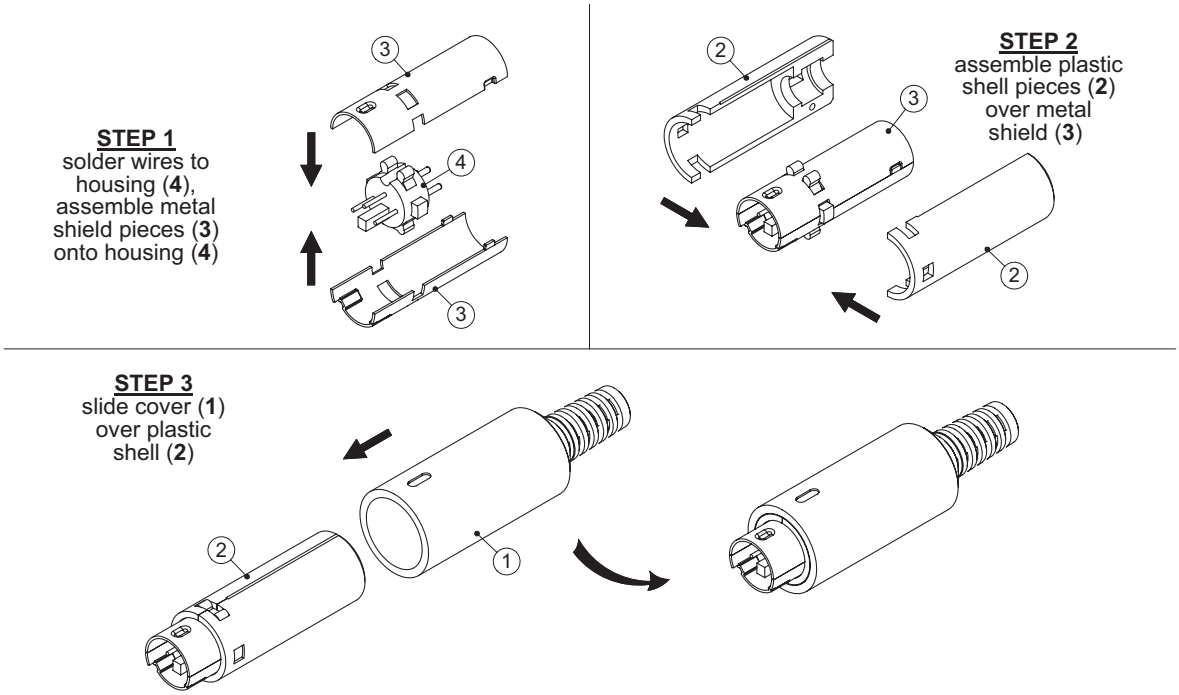

Note: 1. The mechanical assembly is a genral graphical representation only. Specific models will differ in actual appearance.
2. The metal shield for MD-90 is a single piece in which the pin housing slides into shield for assembly.

REVISION HISTORY

rev.	description	date
1.0	initial release	04/06/2006
1.01	updated dimensions	02/27/2008
1.02	added tolerance	12/01/2009
1.03	added insertion and withdrawal force	05/19/2010
1.04	new template applied	04/09/2012
1.05	updated housing	04/24/2012
1.06	added 9 pin model detail	06/08/2017
1.07	brand update	02/21/2020
1.08	logo, datasheet style update	08/05/2022
1.09	discontinued models MD-70 & MD-90	09/26/2022

The revision history provided is for informational purposes only and is believed to be accurate.

CUI Devices offers a one (1) year limited warranty. Complete warranty information is listed on our website.

CUI Devices reserves the right to make changes to the product at any time without notice. Information provided by CUI Devices is believed to be accurate and reliable. However, no responsibility is assumed by CUI Devices for its use, nor for any infringements of patents or other rights of third parties which may result from its use.

CUI Devices products are not authorized or warranted for use as critical components in equipment that requires an extremely high level of reliability. A critical component is any component of a life support device or system whose failure to perform can be reasonably expected to cause the failure of the life support device or system, or to affect its safety or effectiveness.