CUDEVICES

SERIES: CDS-40288-L100 | **DESCRIPTION:** SPEAKER

FEATURES

- micro-speaker
- wide operating temp range
- 8 ohm impedance
- wire leads

RoHS

SPECIFICATIONS

parameter	conditions/description	min	typ	max	units
input power	maximum power: IEC-60268-5, filter 60s on/120s off, 10 cycles at room temp		6.0	8.0	W
impedance	at 1.5 kHz, 1.0 V	6.8	8	9.2	Ω
resonant frequency (Fo)	at 1.0 V	520	650	780	Hz
frequency response	output SPL ±10 dB	Fo		10,000	Hz
sound pressure level	at 1.0 W, 0.5 m ave, at 1.0, 1.2, 1.5, 2.0 kHz	81	84	87	dB
distortion	at 1.0 kHz, 1.0 W			3	%
buzz, rattle, etc.	must be normal at sine wave between Fo ~ 20 kHz		6.9		V
polarity	cone will move forward with positive dc current to "+" terminal				
dimensions	40.0 x 28.5 x 17.5				mm
magnet	Nd-Fe-B				
material	ABS				
cone material	paper + cloth				
terminal	wire leads				
weight			32.5		g
operating temperature		-25		70	°C
storage temperature		-40		85	°C
RoHS	yes				

Notes: 1. All specifications measured at 5~35°C, humidity at 45~85%, under 86~106kPa pressure, unless otherwise noted.

PART NUMBER KEY

CDS-40288-L100 X

Base Number

Termination Style:
"blank" = wire leads, no connector
1 = JST housing SHR-2V-S-B
2 = JST housing ZHR-2
3 = JST housing PHR-2
4 = JST housing HER-2
5* = JST housing PHR-4
6 = Molex housing 51021-0200

Notes: *Discontinued JST housing PHR-4 option.

MECHANICAL DRAWING

units: mm
tolerance: ±0.5 mm

wire: UL1571 LF 28 AWG

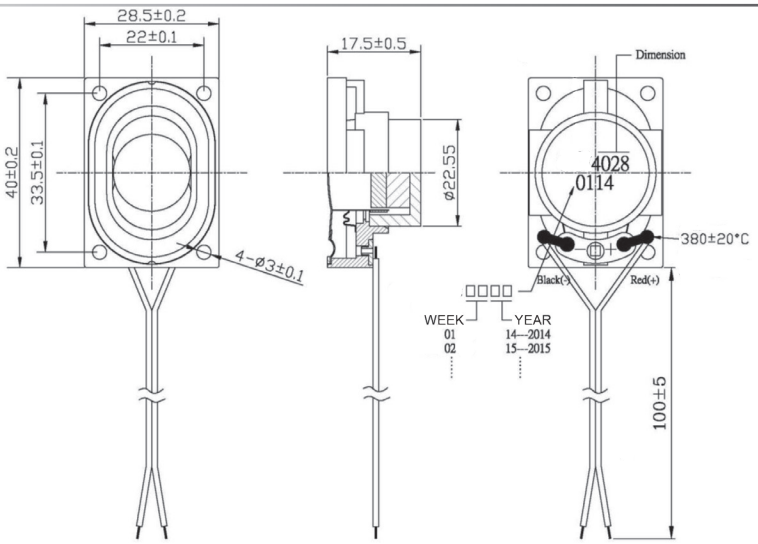

RESPONSE CURVES

Frequency Response Curve

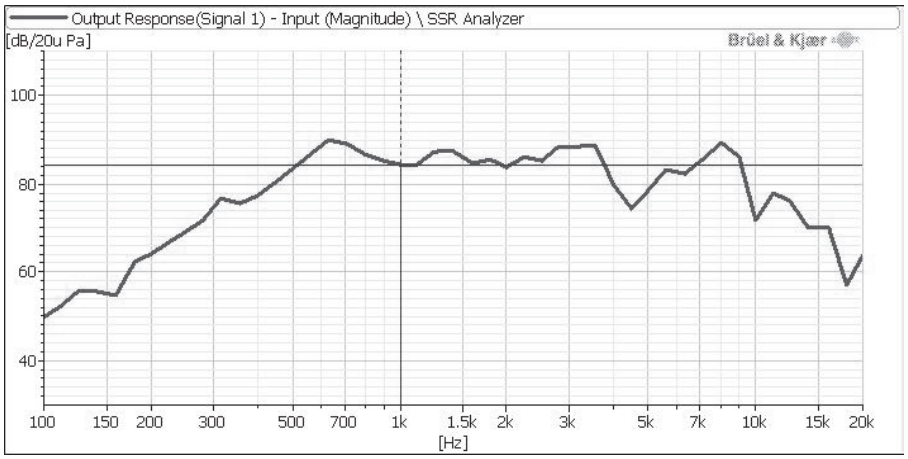

Total Harmonic Distortion Curve

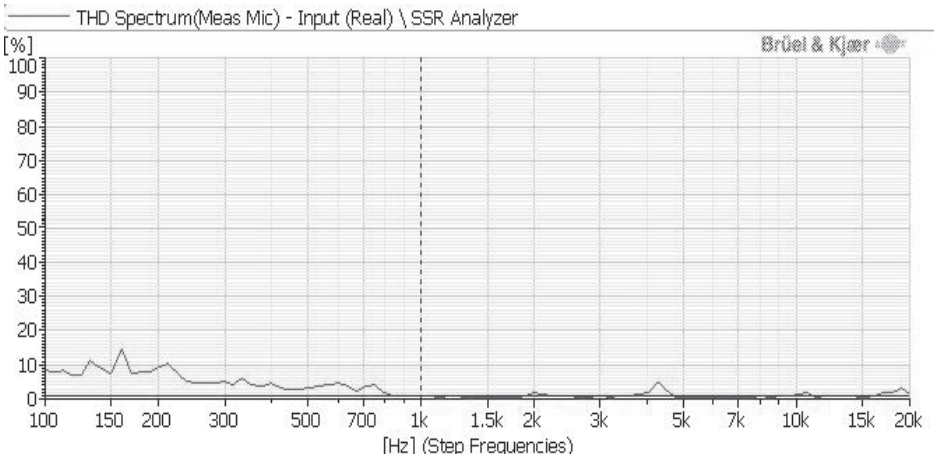

PACKAGING

Carton Size: 440 x 290 x 250 mm
QTY: 400 pcs (40 x 10)

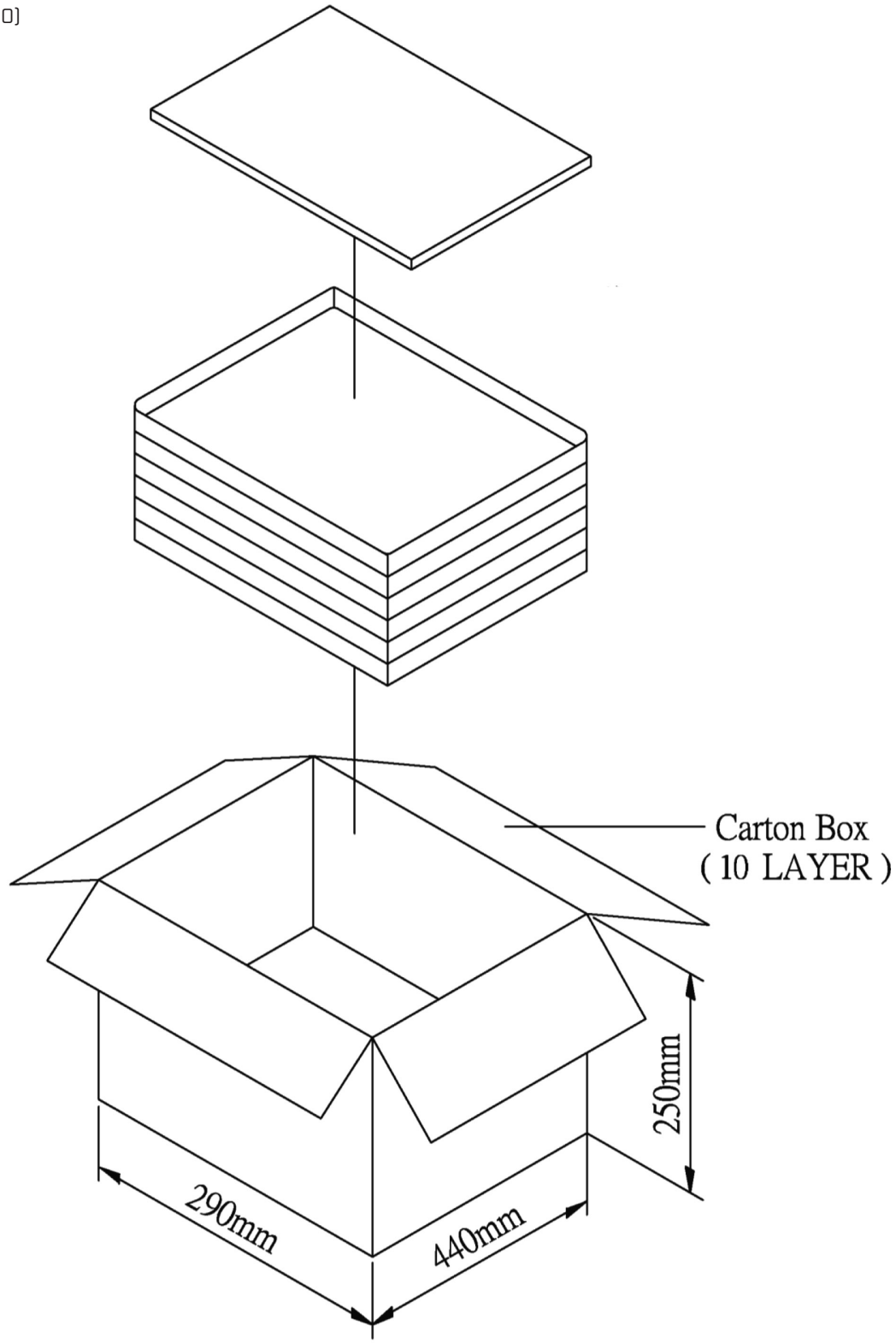

REVISION HISTORY

rev.	description	date
1.0	initial release	03/25/2015
1.01	updated datasheet	09/01/2015
1.02	added connector options	07/15/2016
1.03	updated datasheet	06/14/2019
1.04	discontinued JST housing PHR-4 option	07/01/2019
1.05	added packaging details	08/09/2019
1.06	brand update	01/30/2020
1.07	logo, datasheet style update	08/05/2022

The revision history provided is for informational purposes only and is believed to be accurate.

CUI Devices offers a one (1) year limited warranty. Complete warranty information is listed on our website.

CUI Devices reserves the right to make changes to the product at any time without notice. Information provided by CUI Devices is believed to be accurate and reliable. However, no responsibility is assumed by CUI Devices for its use, nor for any infringements of patents or other rights of third parties which may result from its use.

CUI Devices products are not authorized or warranted for use as critical components in equipment that requires an extremely high level of reliability. A critical component is any component of a life support device or system whose failure to perform can be reasonably expected to cause the failure of the life support device or system, or to affect its safety or effectiveness.

cuidevices.com