CUDEVICES

MODEL: CMT-1270S-SMT-TR | **DESCRIPTION:** MAGNETIC BUZZER TRANSDUCER

FEATURES

- externally driven
- SMT
- washable

RoHS

SPECIFICATIONS

parameter	conditions/description	min	typ	max	units
rated voltage	Vo-p 0V		1.5		Vo-p
operating voltage		1.2		2.0	Vo-p
current consumption	at rated voltage, 2,400 Hz square wave, ½ duty			60	mA
rated frequency			2,400		Hz
sound pressure level	at 10 cm (A-weight), rated voltage, 2,400 Hz square wave, ½ duty	80	85		dBA
coil resistance		13.0	16.0	19.0	Ω
dimensions	12.8 x 9.8 x 7.0				mm
weight			2.0		g
material	PPS (S-206)				
terminal	SMT type (Au plating)				
operating temperature		-20		70	°C
storage temperature		-30		85	°C
RoHS	yes				

Notes: 1. All specifications measured at 5~35°C, humidity at 45~85%, under 86~106 kPa pressure, unless otherwise noted.

SOLDERABILITY

parameter	conditions/description	min	typ	max	units
reel storage	at relative humidity <60%			30	°C
reflow soldering[2]	see recommended reflow soldering profile			260	°C
drying conditions[3]	bake at 40°C for 24 hours				

Note: 2. It is recommended to reflow solder within 48 hours from opening vacuum packaging at a temperature <30°C & relative humidity <60%.
3. When out of packaging for more than 48 hours.

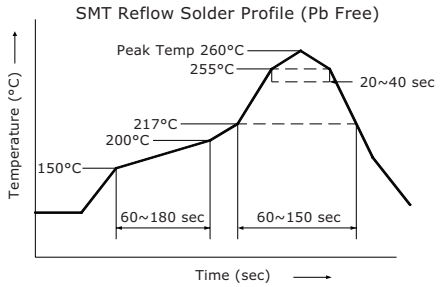

MECHANICAL DRAWING

units: mm
tolerance: ±0.5 mm

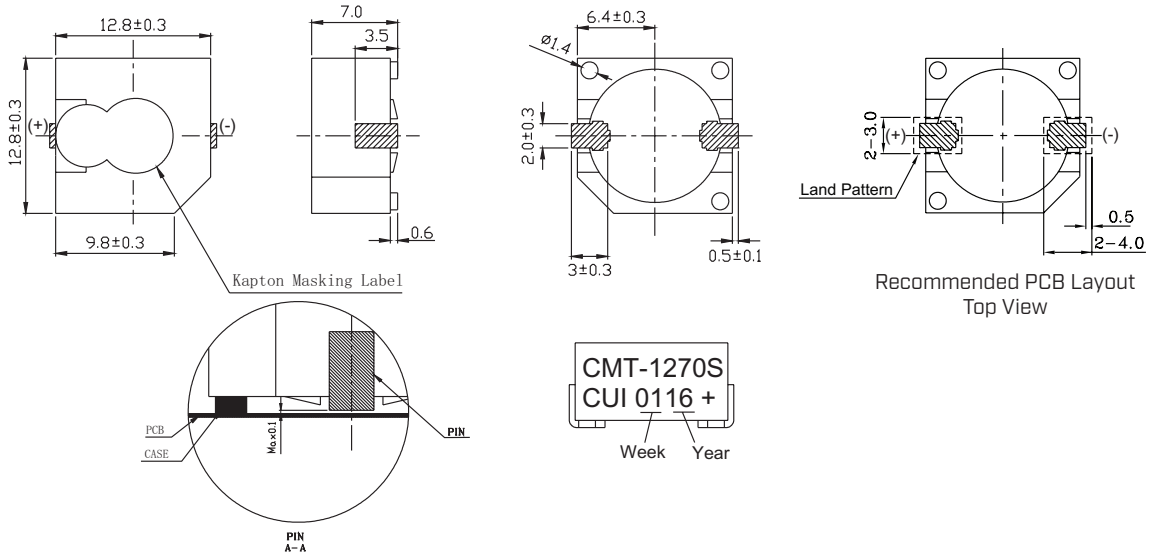

FREQUENCY RESPONSE CURVE

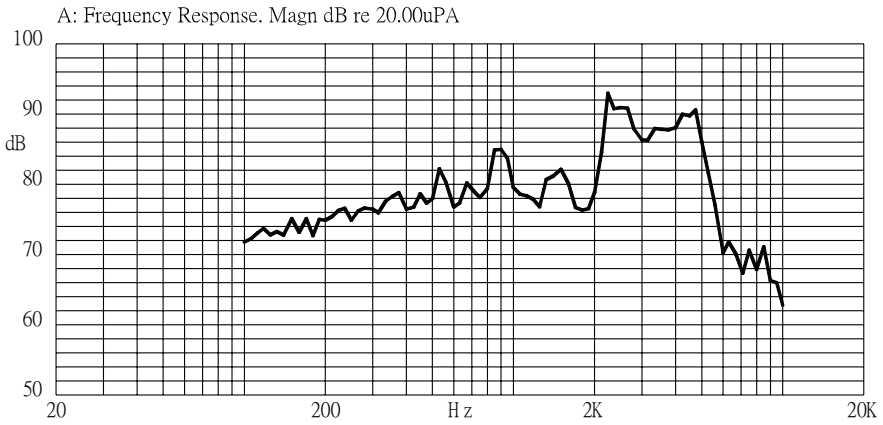

MEASUREMENT METHOD

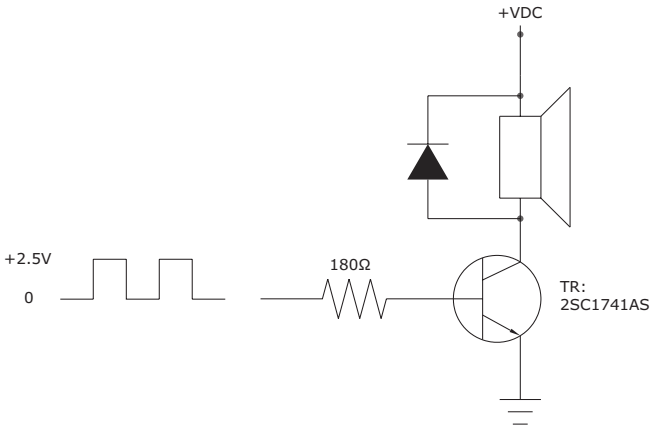

PACKAGING

units: mm

Reel Size: Ø330 mm
Carton Size: 175 x 355 x 350 mm
Reel QTY: 450 pcs per reel
Carton QTY: 2,250 pcs per carton

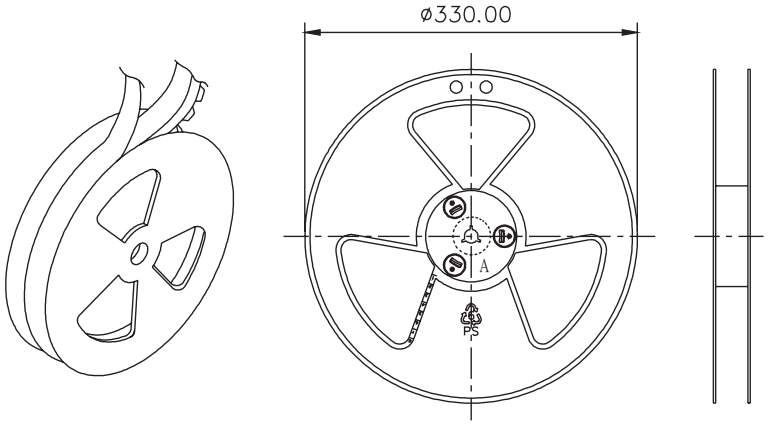

1 Reel : 450PCS

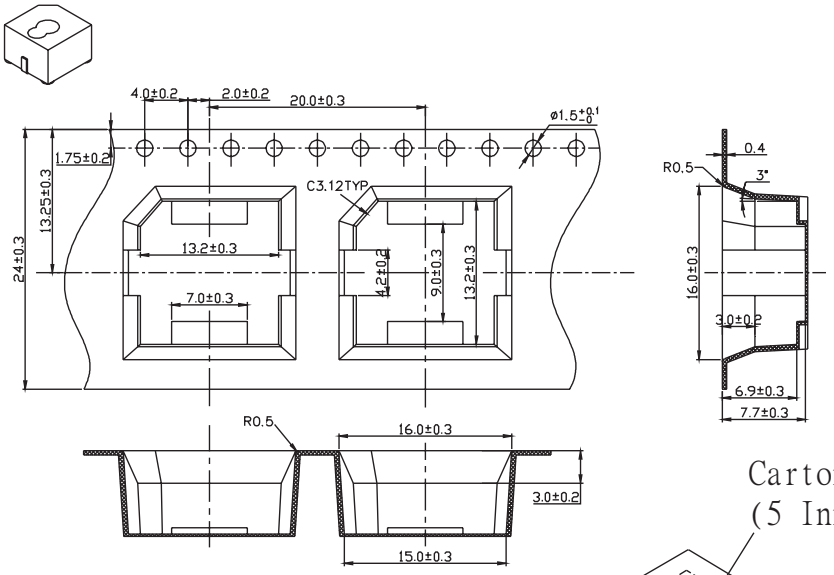

Lot No.	XXXXXXXXXX
Model No.	XXXXXXXXXX
Quantity.	XXXX Pcs
Date: DD MM YY G MADE IN CHINA	

The label is placed on the inner boxes and outer carton.

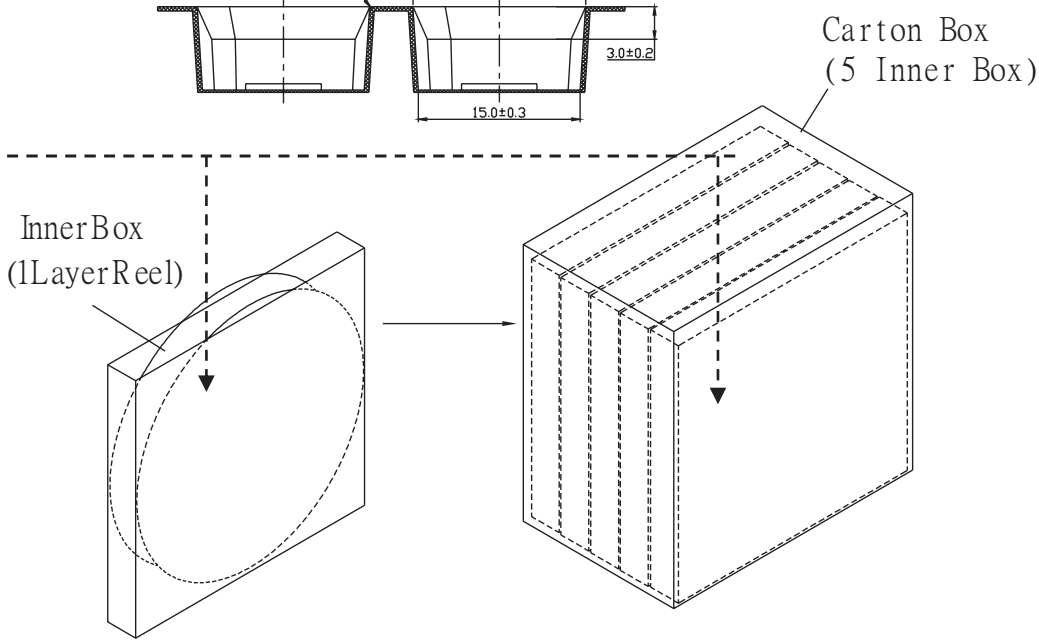

REVISION HISTORY

rev.	description	date
1.0	initial release	03/31/2016
1.01	updated datasheet	05/25/2016
1.02	added storage and drying conditions	07/31/2019
1.03	brand update	11/22/2019
1.04	logo, datasheet style update	08/05/2022

The revision history provided is for informational purposes only and is believed to be accurate.

CUI Devices offers a one (1) year limited warranty. Complete warranty information is listed on our website.

CUI Devices reserves the right to make changes to the product at any time without notice. Information provided by CUI Devices is believed to be accurate and reliable. However, no responsibility is assumed by CUI Devices for its use, nor for any infringements of patents or other rights of third parties which may result from its use.

CUI Devices products are not authorized or warranted for use as critical components in equipment that requires an extremely high level of reliability. A critical component is any component of a life support device or system whose failure to perform can be reasonably expected to cause the failure of the life support device or system, or to affect its safety or effectiveness.