CUDEVICES

MODEL: HSS-B20-0503H | **DESCRIPTION:** HEAT SINK

FEATURES

- TO-220 package
- round hole for component attachment
- solder pins for secure PCB mounting
- black anodized finish

RoHS

MODEL

MODEL	thermal resistance[1]				power dissipation[1]
	@ 75°C ΔT, nat conv (°C/W)	**@ 1 W, nat conv** (°C/W)	**@ 1 W, 200 LFM** (°C/W)	**@ 1 W, 400 LFM** (°C/W)	**@ 75°C ΔT, nat conv** (W)
HSS-B20-0503H	16.30	19.73	5.44	4.22	4.60

Note: 1. See performance curves for full thermal resistance details.

PERFORMANCE CURVES

	Heatsink Temperature Rise Above Ambient (ΔT = Ths - Ta) (°C)		
Power (W)	Natural Conv.	200 LFM	400 LFM
0	0	0	0
1	19.73	5.44	4.22
2	37.51	11.67	8.80
3	51.61	18.00	13.39
4	66.98	24.70	18.04
5	80.49	30.86	22.95

Ths: "hot spot" temperature measured on the heatsink
Ta: ambient temperature

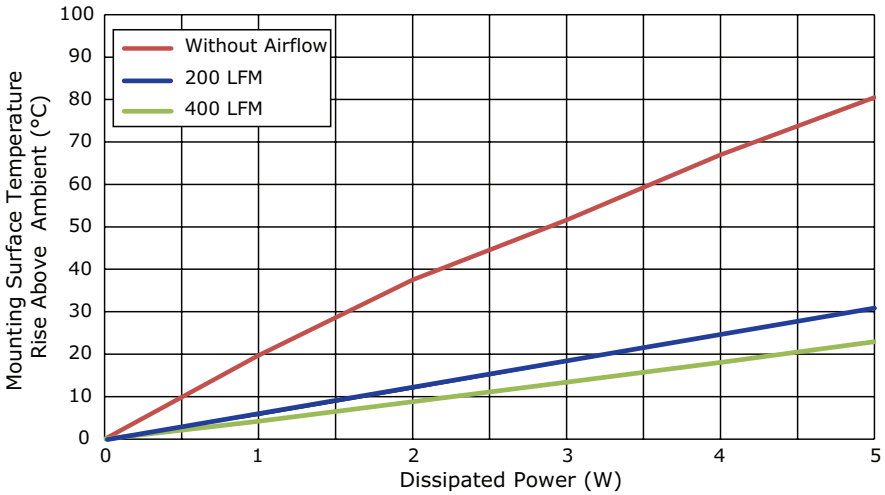

MECHANICAL DRAWING

units: mm
tolerance: ±0.5 mm

MATERIAL	AL1050
FINISH	black anodized
THICKNESS	1.2 mm
PIN MATERIAL	brass
PIN PLATING	tin
WEIGHT	6.0 g

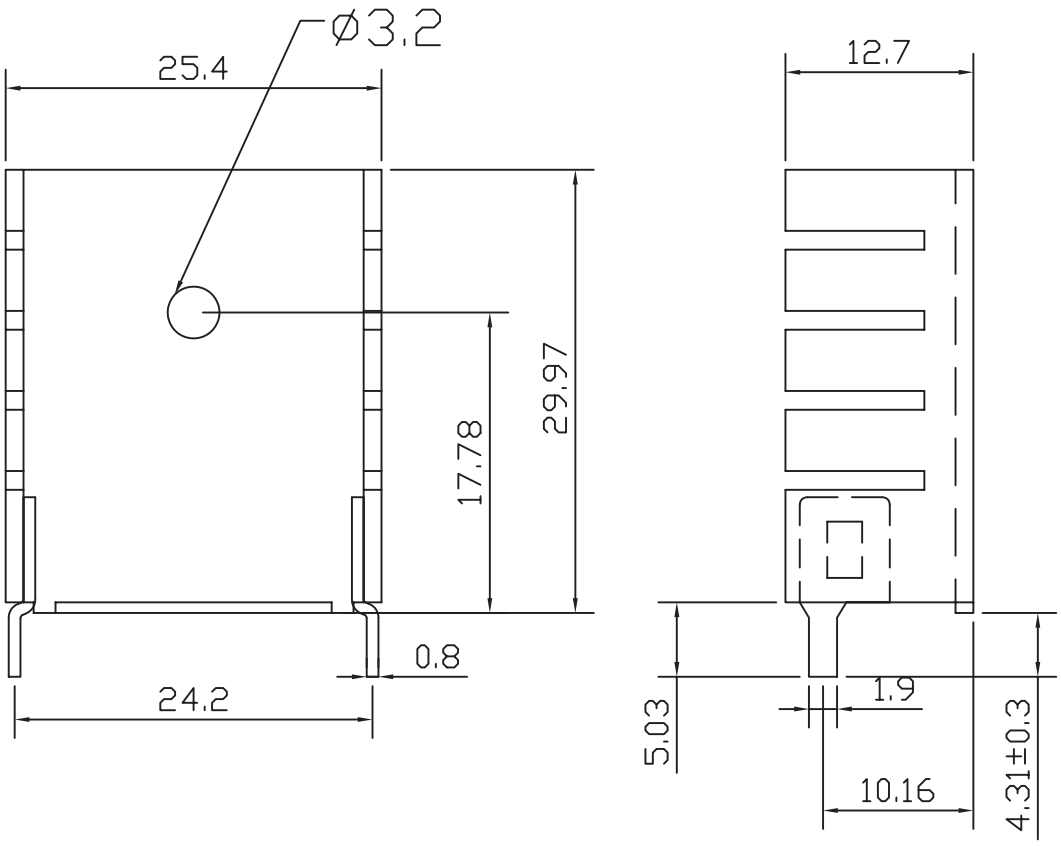

REVISION HISTORY

rev.	description	date
1.0	initial release	03/31/2017
1.01	added dimensions to drawing	08/07/2019
1.02	brand update	02/12/2020
1.03	logo, datasheet style update	08/05/2022

The revision history provided is for informational purposes only and is believed to be accurate.

CUI Devices offers a one (1) year limited warranty. Complete warranty information is listed on our website.

CUI Devices reserves the right to make changes to the product at any time without notice. Information provided by CUI Devices is believed to be accurate and reliable. However, no responsibility is assumed by CUI Devices for its use, nor for any infringements of patents or other rights of third parties which may result from its use.

CUI Devices products are not authorized or warranted for use as critical components in equipment that requires an extremely high level of reliability. A critical component is any component of a life support device or system whose failure to perform can be reasonably expected to cause the failure of the life support device or system, or to affect its safety or effectiveness.

cuidevices.com