MODEL: MJ-2523-SMT-TR | DESCRIPTION: AUDIO JACK

FEATURES

- surface mount
- horizontal
- tip switch
- tape and reel package

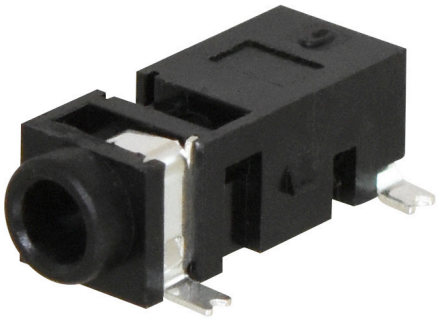

SPECIFICATIONS

parameter	conditions/description	min	typ	max	units
rated input voltage			12		Vdc
rated input current				1	A
contact resistance				30	mΩ
insulation resistance	at 500 Vdc	100			MΩ
voltage withstand	for 1 minute			500	Vac
insertion/withdrawal force		0.3		3	kg
operating temperature		-40		85	°C
storage temperature		-10		50	°C
life			5,000		cycles
flammability rating	UL94V-0				
RoHS	yes				

SOLDERABILITY

parameter	conditions/description	min	typ	max	units
reel storage	reel opened & unsused parts repacked within 2 hours: ≤30°C, ≤60% humidity reel unopened, 1 year shelf life: ≤30°C, ≤85% humidity				
reflow soldering	see reflow profile			260	°C
drying conditions	parts removed from reel over 6 hours: bake at 40°C for 6 hours				

Note: 1. CUI Devices recommends usage of the product within 2 hours after T&R is opened. After 6 hours, CUI Devices recommends drying the parts prior to use.

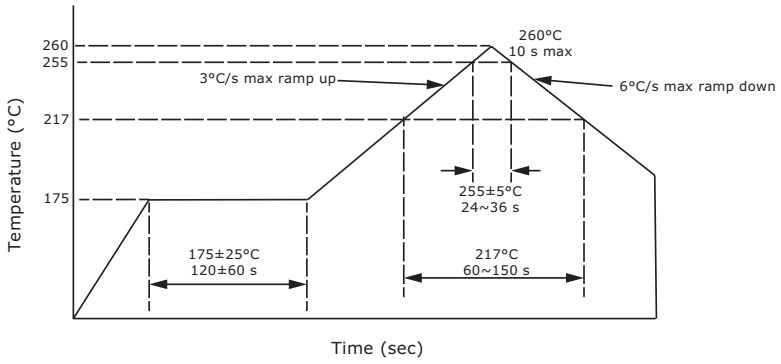

MECHANICAL DRAWING

units: mm
tolerance:
X.X ±0.30 mm
X.XX ±0.20 mm
X.XXX ±0.10 mm
PCB: ±0.05 mm

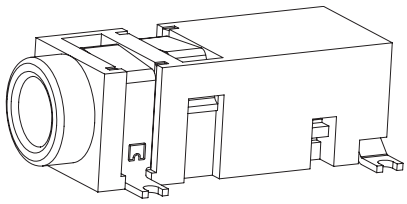

DESCRIPTION	MATERIAL	PLATING/COLOR
terminal 1	phosphor bronze t=0.20	silver
terminal 2	phosphor bronze t=0.25	silver
terminal 4	brass t=0.25	silver
insulator	PA9T (UL94V-0)	black

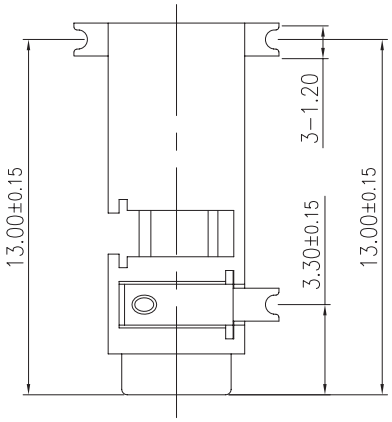

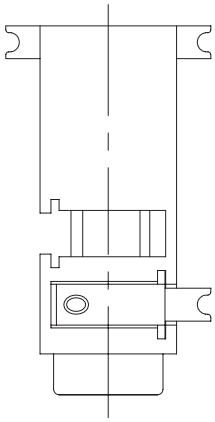

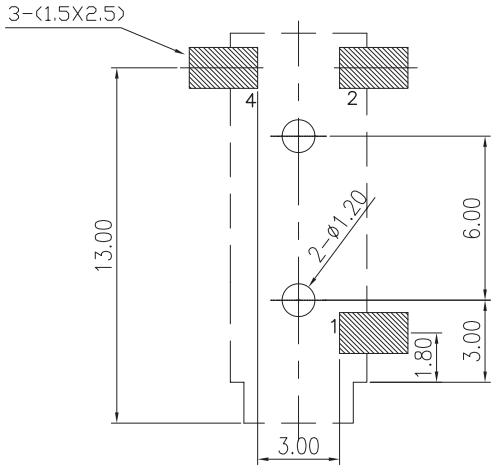

Recommended PCB Layout
Top View

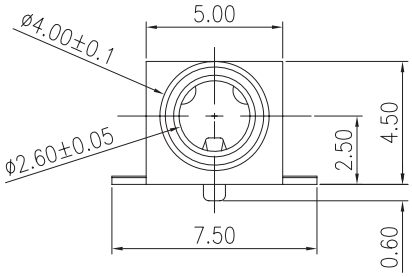

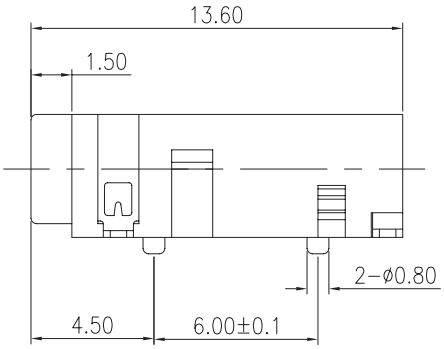

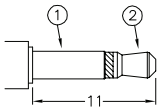

ø2.5 MATE PLUG

Model No.	MJ-2523-SMT-TR
Schematic	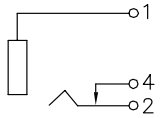
PIN	
1	sleeve
2	tip
4	tip switch

PACKAGING

units: mm

Reel Size: Ø330 mm
Reel QTY: 700 pcs per reel

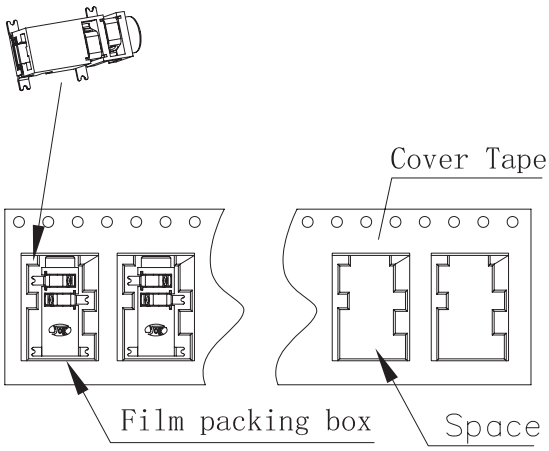

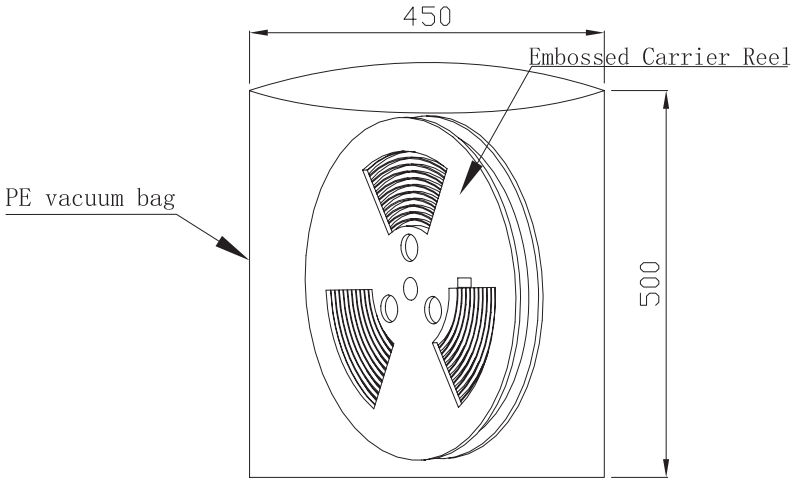

REVISION HISTORY

rev.	description	date
1.0	initial release	11/16/2005
1.01	added TR package option	11/07/2012
1.02	added storage and drying conditions, and tape and reel packaging details	01/12/2018
1.03	brand update	10/04/2019
1.04	product reengineered for improved manufacturability and production yield, see PCN for details	01/23/2023

The revision history provided is for informational purposes only and is believed to be accurate.

CUI Devices offers a one (1) year limited warranty. Complete warranty information is listed on our website.

CUI Devices reserves the right to make changes to the product at any time without notice. Information provided by CUI Devices is believed to be accurate and reliable. However, no responsibility is assumed by CUI Devices for its use, nor for any infringements of patents or other rights of third parties which may result from its use.

CUI Devices products are not authorized or warranted for use as critical components in equipment that requires an extremely high level of reliability. A critical component is any component of a life support device or system whose failure to perform can be reasonably expected to cause the failure of the life support device or system, or to affect its safety or effectiveness.