CUI INC
a bel group

SERIES: PBO-1 | DESCRIPTION: AC-DC POWER SUPPLY

FEATURES

- up to 1 W continuous power
- ultra-compact SIP package
- available in straight-pin and bent-pin configurations
- wide input voltage range
- over current and short circuit protections
- 3,000 Vac isolation

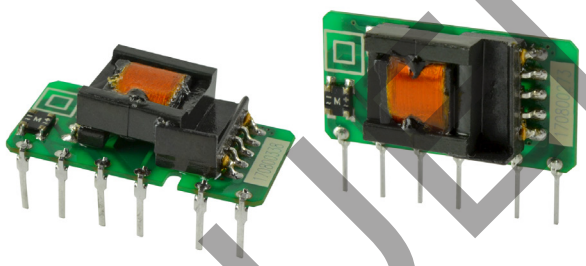

MODEL	output voltage (Vdc)	output current min (mA)	output current max (mA)	output power max (W)	ripple and noise[1] max (mVp-p)	efficiency[2] typ (%)
PBO-1-S5	5	10	200	1	120	66
PBO-1-S9	9	5.55	111	1	120	67
PBO-1-S12	12	4.15	83	1	120	70
PBO-1-S15	15	3.35	67	1	120	69
PBO-1-S24	24	2.1	42	1	120	68

Notes:
1. At full load, nominal input, 20 MHz bandwidth oscilloscope, see Application Circuit.
2. At 230 Vac input.
3. All specifications are measured at Ta=25°C, humidity <75%, 115 or 230 Vac input voltage, and rated output load unless otherwise specified.

PART NUMBER KEY

PBO-1 - S XX - X

- PBO-1: Base Number
- XX: Output Voltage
- X: Orientation
  - "blank" = vertical
  - B = right-angle

DISCONTINUED

DISCONTINUED

INPUT

parameter	conditions/description	min	typ	max	units
voltage		85 70		305 430	Vac Vdc
frequency		47		63	Hz
current	at 115 Vac at 277 Vac			0.12 0.06	A A
inrush current	at 115 Vac at 277 Vac		9 15		A A
no load power consumption	24 Vdc output models all other models			0.3 0.25	W W

OUTPUT

parameter	conditions/description	min	typ	max	units
capacitive load	5 Vdc output models all other models			220 100	µF µF
initial set point accuracy	5 Vdc output models all other models			±8 ±5	% %
line regulation	at full load		±1.5		%
load regulation	from 5~100% load 24 Vdc output models all other models		 ±6 ±3		 % %
hold-up time	at 230 Vac	150	180		ms
switching frequency				100	kHz
temperature coefficient			±0.15		%/°C

PROTECTIONS

parameter	conditions/description	min	typ	max	units
over current protection	auto recovery	110		500	%
short circuit protection	continuous, auto recovery				

SAFETY & COMPLIANCE

parameter	conditions/description	min	typ	max	units
isolation voltage	input to output for 1 minute	3,000			Vac
safety approvals	certified to 62368: IEC/EN certified to 60950: UL/cUL				
safety class	Class II				
conducted emissions	CISPR32/EN55032, Class A (recommended circuit 1,2,6)				
	CISPR32/EN55032, Class B (recommedned circuit 3,4,5)				
radiated emissions	CISPR32/EN55032, Class A (recommended circuit 1,2,6)				
	CISPR32/EN55032, Class B (recommended circuit 3,4,5)				
ESD	IEC/EN61000-4-2, contact ±4 kV, perf. Criteria B				
radiated immunity	IEC/EN61000-4-3, 10V/m, perf. Criteria A				
EFT/burst	IEC/EN61000-4-4, ±2 kV, (recommended circuit 1,2,3), perf. Criteria B				
	IEC/EN61000-4-4, ±4 kV, (recommended circuit 4,5,6), perf. Criteria B				
surge	IEC/EN61000-4-5, line to line ±1 kV, Class B (recommended circuit 1,2), perf. Criteria B				
	IEC/EN61000-4-5, line to line ±2 kV (recommended circuit 6), perf. Criteria B				
	IEC/EN61000-4-5, line to line ±1 kV/line to ground ±2 kV (recommended circuit 3) perf. Criteria B				
	IEC/EN61000-4-5, line to line ±2 kV/line to ground ±4 kV (recommended circuit 4,5) perf. Criteria B				
conducted immunity	IEC/EN61000-4-6 Class A, 10 Vr.m.s, perf. Criteria A				

SAFETY & COMPLIANCE (CONTINUED)

parameter	conditions/description	min	typ	max	units
voltage dips & interruptions	IEC/EN61000-4-11, 0%-70%, perf. Criteria B				
MTBF	as per MIL-HDBK-217F at 25°C	200,000			hours
RoHS	2011/65/EU				

Notes: 1. The power supply is considered a component which will be installed into final equipment. The final equipment still must be tested to meet the necessary EMC directives.

ENVIRONMENTAL

parameter	conditions/description	min	typ	max	units
operating temperature	see derating curves	-40		85	°C
storage temperature		-40		105	°C
storage humidity	non-condensing			85	%

SOLDERABILITY

parameter	conditions/description	min	typ	max	units
hand soldering	for 3~5 seconds	350	360	370	°C
wave soldering	for 5~10 seconds	255	260	265	°C

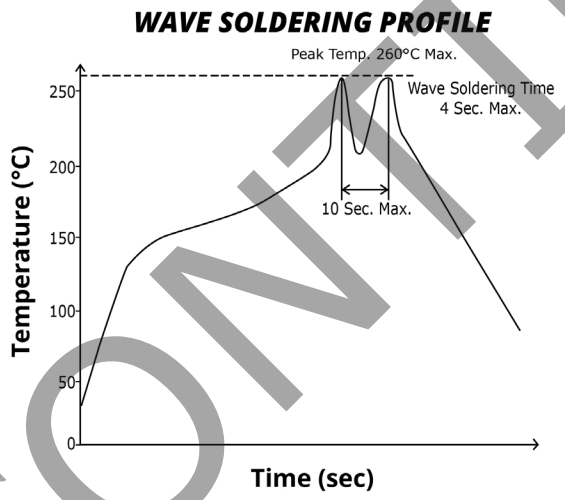

DISCONTINUED

DERATING CURVES

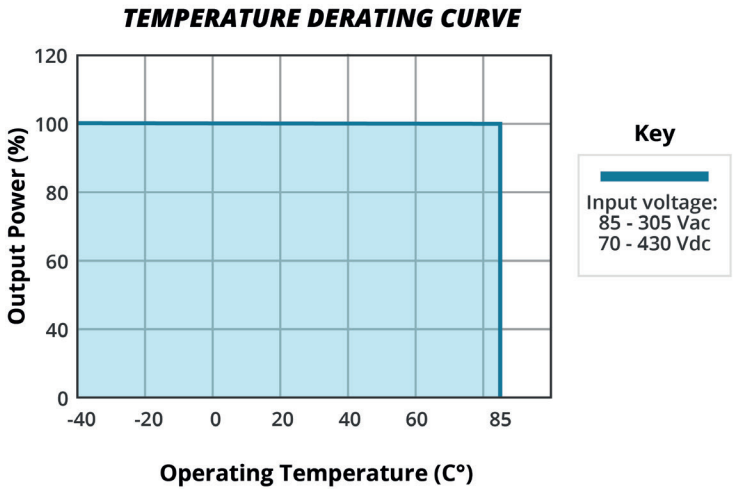

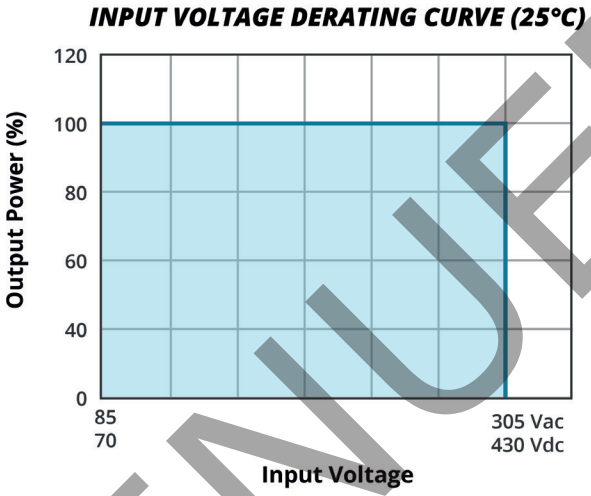

EFFICIENCY CURVES

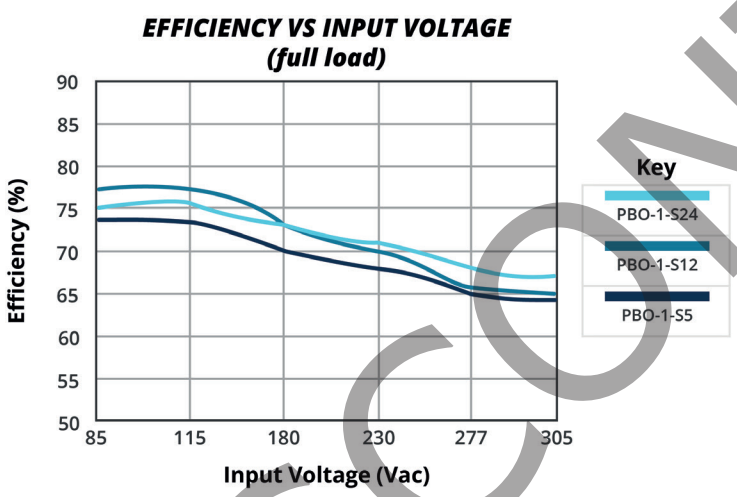

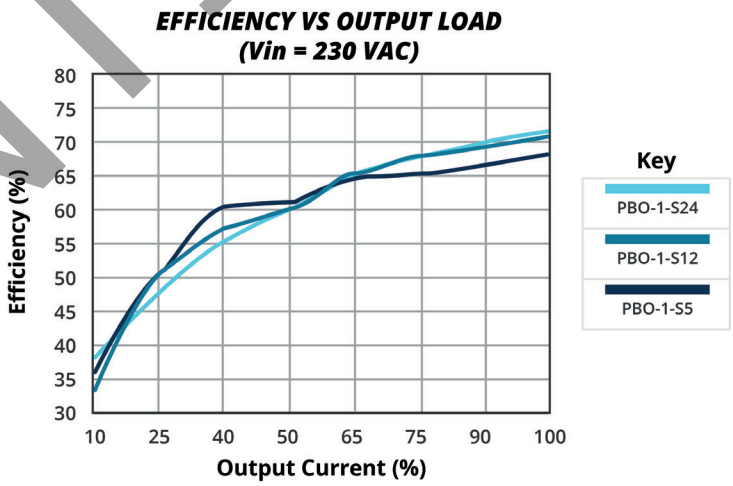

DISCONTINUED

MECHANICAL

parameter	conditions/description	min	typ	max	units
dimensions	vertical models: 35.00 x 11.00 x 18.00 (1.38 x 0.43 x 0.71 inches) right-angle models: 35.00 x 18.00 x 11.00 (1.38 x 0.71 x 0.43 inches)				mm mm
weight			6		g

MECHANICAL DRAWING

Vertical Orientation
units: mm[inch]
tolerance: ±0.50[±0.020]
pin section tolerance: ±0.10[±0.004]

PIN CONNECTIONS	
PIN	Function
1	AC (N)
3	AC (L)
5	+V(CAP)
7	-V(CAP)
10	-Vo
12	+Vo

Note: 1. It is required to add C1 between pins 5 & 7 (see application circuits).

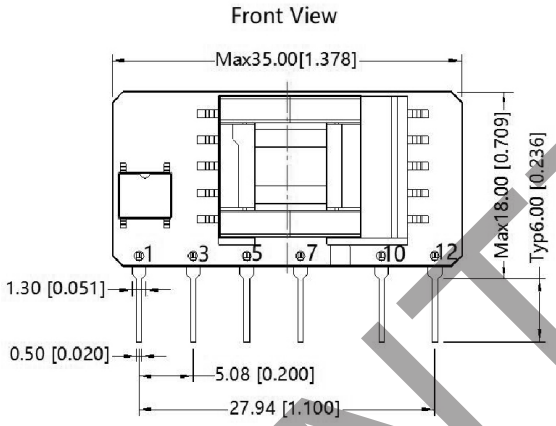

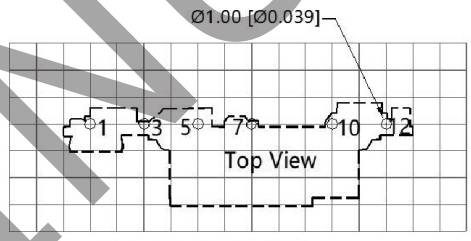

Note:Grid 2.54*2.54mm

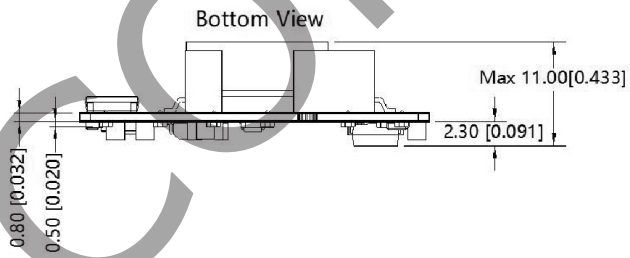

DISCONTINUED

MECHANICAL DRAWING (CONTINUED)

Right-angle Orientation
units: mm[inch]
tolerance: ±0.50[±0.020]
pin section tolerance: ±0.10[±0.004]

PIN CONNECTIONS	
PIN	Function
1	AC (N)
3	AC (L)
5	+V(CAP)
7	-V(CAP)
10	-Vo
12	+Vo

Note: 1. It is required to add C1 between pins 5 & 7 (see application circuits).

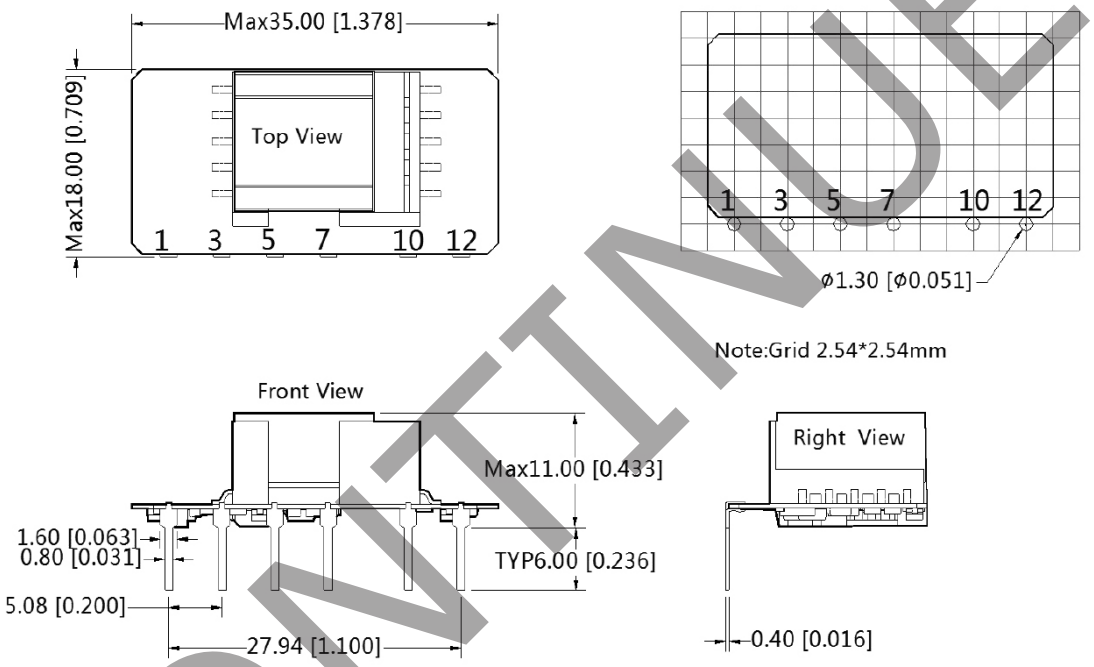

DISCONTINUED

APPLICATION DESIGN REFERENCE

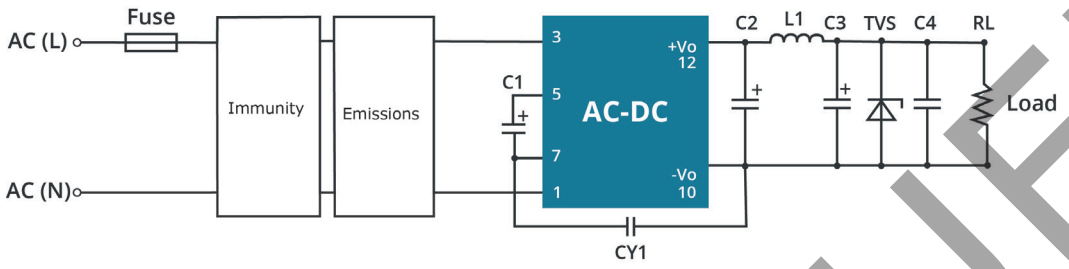

PBO-1 series additional circuits design reference			
Immunity design circuits for reference		Emissions design circuits for reference	
Class III	Class IV	Class A	Class B
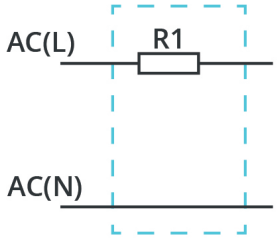	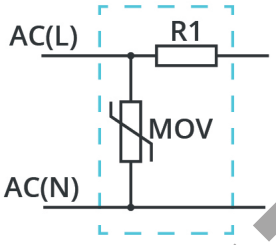	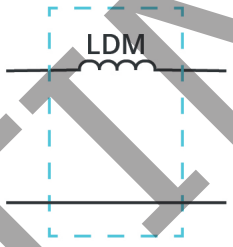	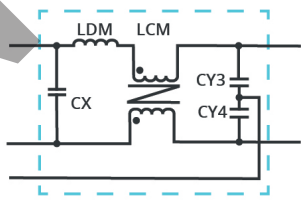

PBO-1 Series additional component selection guide								
Part no.	FUSE (required)	C1 (required)	C2 (required)	L1 (required)	C3 (required)	C4	CY1 (required)	TVS
PBO-1-S5	1A/300V	4.7μF/450V (-20°C~85°C) 10μF/450V (-40°C~85°C)	270μF/16V (solid-state capacitor)	2.2μH (max 60mΩ)	68μF/35V	0.1μF/50V	1.0nF/400 Vac	SMBJ7.0A
PBO-1-S9			100μF/16V (solid-state capacitor)					SMBJ12A
PBO-1-S12								SMBJ20A
PBO-1-S15			100μF/35V					SMBJ20A
PBO-1-S24								SMBJ30A

Note: 1. C1: Input capacitors, C2: output storage capacitors, must be connected externally.
2. It is recommended using an electrolytic capacitor with high frequency and low ESR rating for C3. Combined with C2, L1, they form a pí-type filter circuit. Choose a capacitor voltage rating with at least 20% margin, in other words not exceeding 80%. C4 is a ceramic capacitor, used for filtering high frequency noise. A suppressor diode (TVS) is a recomended to protect the application in case of a converter failure and specification should be 1.2 times of the output voltage.

PBO-1 Series Enviromental and EMC selection guide						
Recommended circuit	Application enviromental	Typical industry	Input voltage range	Enviroment temperature	Emissions	Immunity
1/2	Basic application	None	85 ~ 305 Vac	-40° ~ 88°C	Class A	Class III
3	Indoor civil enviroment	Smart home / Home appliances (2Y)		-25° ~ 55°C	Class B	Class III
	Indoor general enviroment	Intelligent building / Intelligent agriculture				
4/5	Indoor industrial enviroment	Manufacturing workshop		-25° ~ 55°C	Class B	Class IV
6	Oudoor general enviroment	ITS / Video monitoring / Charging point / Communica-tion / Securitiy and protection		-40° ~ 85°C	Class A	Class IV

DISCONTINUED

EMC RECOMMENDED CIRCUIT

Circuit 1

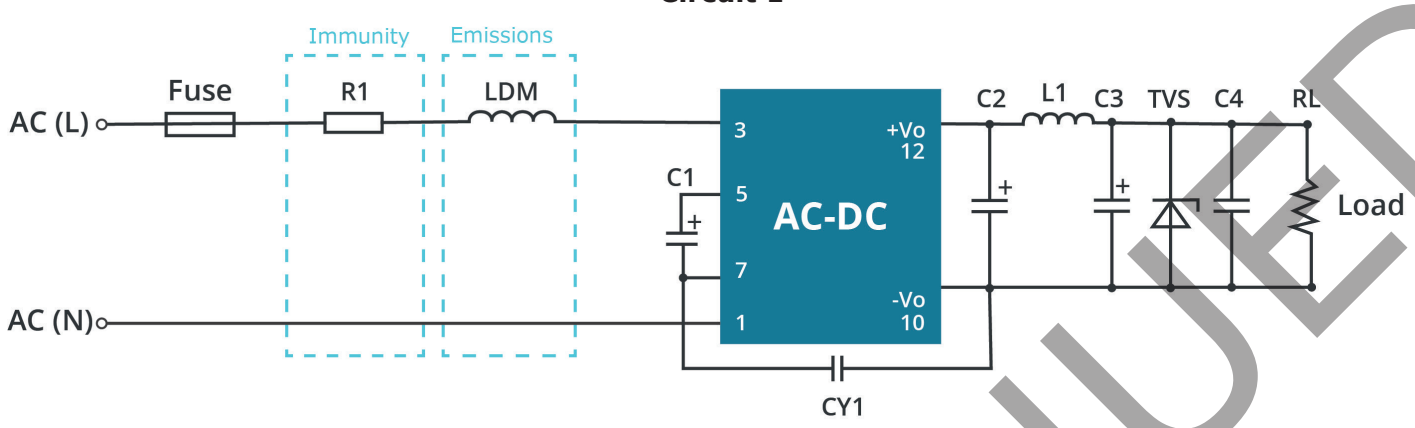

Table 1

Application enviromental	Ambient temperature range	Immunity Class	Emissions Class
Basic application	-40°C ~ 85°C	Class III	Class A

Component	Recommended value
R1	12Ω/3W
LDM	4.7mH
FUSE (required)	1A/300V, slow-blow

Circuit 2

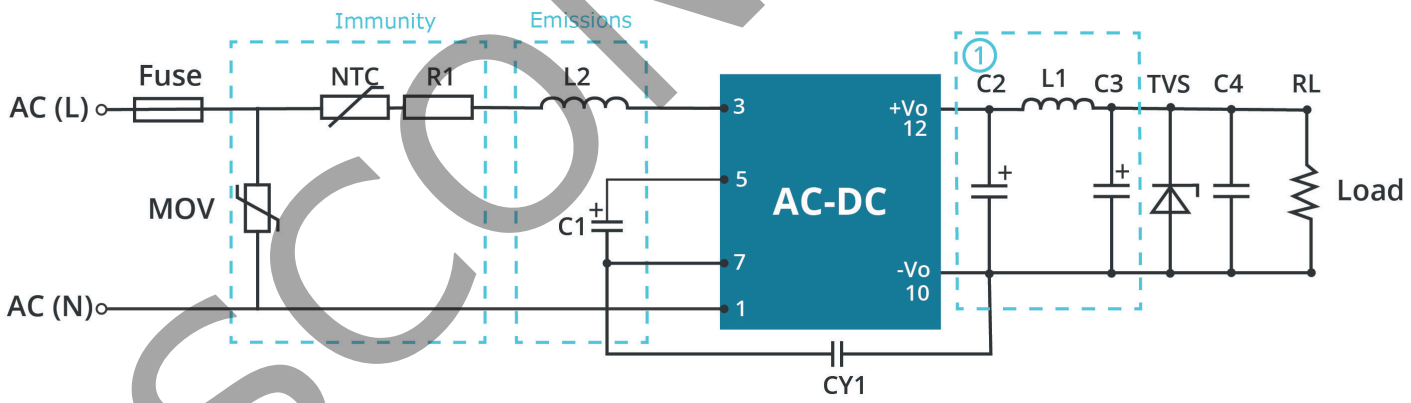

Table 2

Application enviromental	Ambient temperature range	Immunity Class	Emissions Class
Basic application	-40°C ~ 85°C	Class III	Class A

Component	Recommended value
R1	12Ω/2W
L2	4.7mH
NTC	13D-5
MOV	S14K350
FUSE (required)	1A/300V, slow-blow

DISCONTINUED

EMC RECOMMENDED CIRCUIT (CONTINUED)

Circuit 3

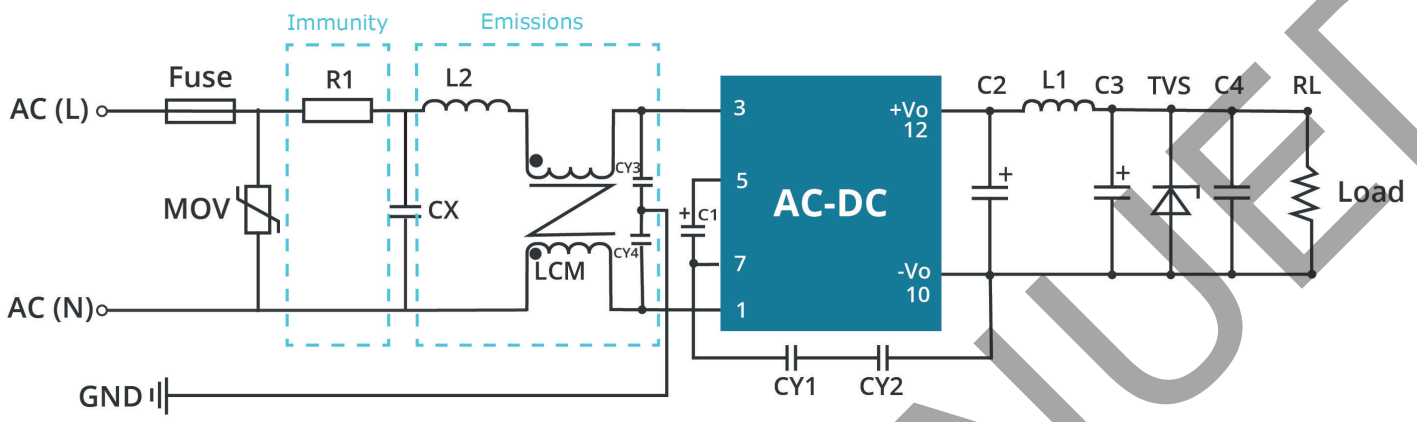

Table 3

Application enviromental	Ambient temperature range	Immunity Class	Emissions Class
Indoor civil / general	-40°C ~ 55°C	Class III	Class B

Component	Recommended value
R1	12Ω/3W
CY1 (CY2)	1.0nF/400Vac
LCM	3.5mH
LDM	0.33mH
CX	0.1μF/310Vac
CY3, CY4	0.56nF/400Vac
FUSE (required)	1A/300V, slow-blow

Note: In the home appliance application enviroment, the two Y capacitors of the primary and secondary need to be externally connected (CY1/CY2, value at 2.2nF/400Vac) which can meet the EN60335 certification. In other industries, only one Y capacitor is required.

DISCONTINUED

EMC RECOMMENDED CIRCUIT (CONTINUED)

Circuit 4

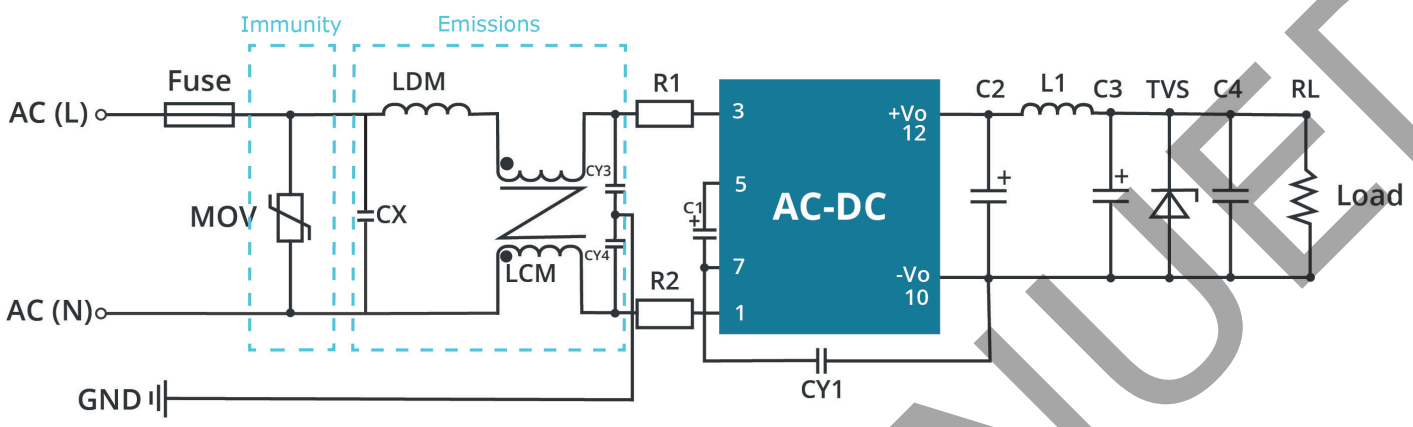

Table 4

Application enviromental	Ambient temperature range	Immunity Class	Emissions Class
Indoor industrial	-25°C ~ 55°C	Class IV	Class B

Component	Recommended value
MOV	S14K350
C1	450V/22uF
CY1	2.2nF/400Vac
CX	0.1μF/310Vac
LCM	3.5mH
LDM	0.33mH
R1, R2	12Ω/2W
CY3, CY4	0.56nF/400Vac
FUSE (required)	2A/300V, slow-blow

DISCONTINUED

EMC RECOMMENDED CIRCUIT (CONTINUED)

Circuit 5

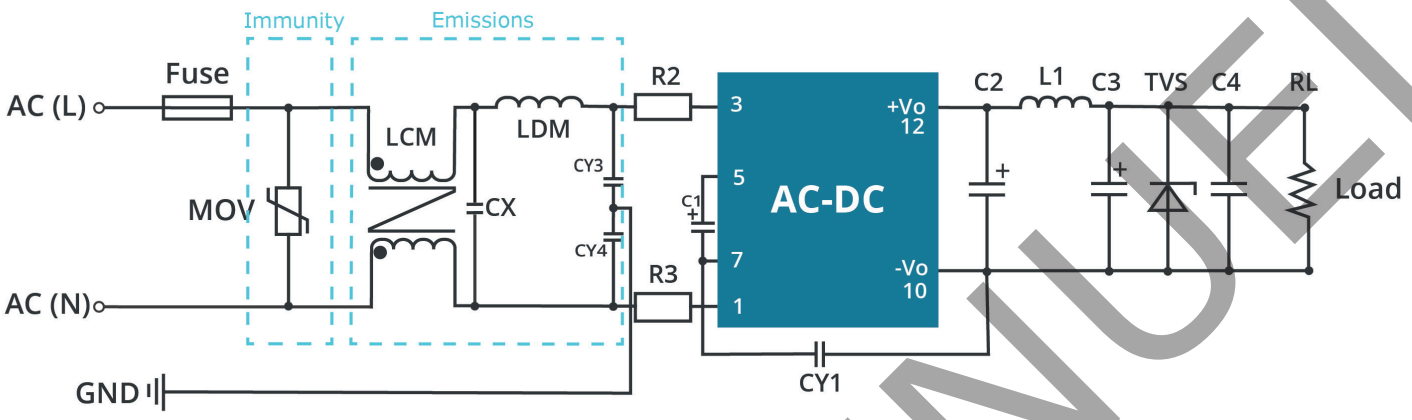

Table 5

Application enviromental	Ambient temperature range	Immunity Class	Emissions Class
Indoor industrial	-25°C ~ 55°C	Class IV	Class B

Component	Recommended value
MOV	S14K350
C1	450V/22uF
CY1	2.2nF/400Vac
CY3/CY4	0.56µF/400Vac
CX	0.1µF/310Vac
LCM	3.5mH
LDM	0.33mH
R2/R3	12Ω/2W
FUSE (required)	2A/300V, slow-blow

DISCONTINUED

EMC RECOMMENDED CIRCUIT (CONTINUED)

Circuit 6

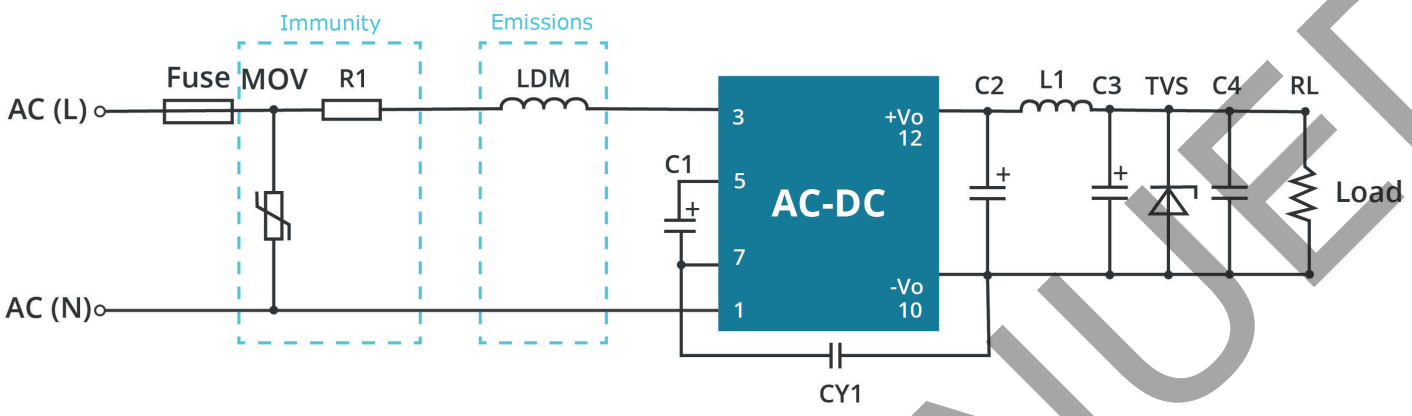

Table 6

Application enviromental	Ambient temperature range	Immunity Class	Emissions Class
Outdoor general enviroment	-40°C ~ 85°C	Class IV	Class A

Component	Recommended value
MOV	S14K350
C1	450V/22uF
LDM	4.7mH
R1	12Ω/3W
FUSE (required)	2A/300V, slow-blow

DISCONTINUED

REVISION HISTORY

rev.	description	date
1.0	initial release	12/08/2017
1.02	datasheet update, safety approvals updated to match 62368 certification, PCN-656-95022R-01	10/12/2020
1.03	clarified safety certifications	11/24/2020
1.04	derating and efficiency curves updated	01/18/2022
1.05	UKCA mark added	05/25/2022

The revision history provided is for informational purposes only and is believed to be accurate.

DISCONTINUED

CUI INC
a bel group

Headquarters
20050 SW 112th Ave.
Tualatin, OR 97062
800.275.4899

Fax 503.612.2383
cui.com
techsupport@cui.com

CUI offers a two (2) year limited warranty. Complete warranty information is listed on our website.

CUI reserves the right to make changes to the product at any time without notice. Information provided by CUI is believed to be accurate and reliable. However, no responsibility is assumed by CUI for its use, nor for any infringements of patents or other rights of third parties which may result from its use.

CUI products are not authorized or warranted for use as critical components in equipment that requires an extremely high level of reliability. A critical component is any component of a life support device or system whose failure to perform can be reasonably expected to cause the failure of the life support device or system, or to affect its safety or effectiveness.