CUI INC
a bel group

SERIES: PRME1-M | **DESCRIPTION:** DC-DC CONVERTER

FEATURES

- 1 W isolated output
- single regulated output
- 3,000 Vdc isolation
- continuous short-circuit protection
- wide operating temperature range -40~85°C
- efficiency up to 71%
- designed to meet EN/BS EN 62368-1

RoHS

MODEL

MODEL	input voltage typ (Vdc)	input voltage range (Vdc)	output voltage (Vdc)	output current min (mA)	output current max (mA)	output power max (W)	ripple & noise[1] max (mVp-p)	efficiency typ (%)
PRME1-S12-S5-M	12	11.4~12.6	5	20	200	1	100	69
PRME1-S12-S12-M	12	11.4~12.6	12	9	84	1	100	71
PRME1-S12-S15-M	12	11.4~12.6	15	7	67	1	100	71
PRME1-S15-S5-M	15	14.25~15.75	5	20	200	1	100	68
PRME1-S24-S5-M	24	22.8~25.2	5	20	200	1	100	69
PRME1-S24-S12-M	24	22.8~25.2	12	9	84	1	100	71
PRME1-S24-S15-M	24	22.8~25.2	15	7	67	1	100	71

Notes: 1. Measured at nominal input, 20 MHz bandwidth using the "parallel cable". (see Application circuit).
2. All specifications are measured at Ta=25°C, humidity < 75%, nominal input voltage, and rated output load unless otherwise specified.

PART NUMBER KEY

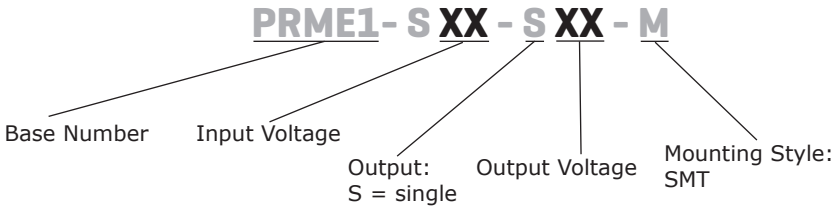

INPUT

parameter	conditions/description		min	typ	max	units
operating input voltage	12 Vdc input models 15 Vdc input models 24 Vdc input models		11.4 14.25 22.8	12 15 24	12.6 15.75 25.2	Vdc Vdc Vdc
current[3]	12 Vdc input models	5 Vdc output model all other output models		121/8 117/8	128/- 124/-	mA mA
	15 Vdc input models			99/8	105/-	mA
	24 Vdc input models	5 Vdc output model all other output models		60/4 59/4	66/- 64/-	mA mA
filter	filter capacitor					

Note: 3. full load/no load

OUTPUT

parameter	conditions/description	min	typ	max	units
maximum capacitive load	5 Vdc output models 12 Vdc output models 15 Vdc output models			2,400 560 220	µF µF µF
voltage accuracy	at full load			±3	%
line regulation	for Vin change of ±1%			±0.25	%
load regulation	from 10% to full load			±2	%
switching frequency	100% load, nominal input voltage		260		kHz
temperature coefficient	at full load		±0.02		%/°C

PROTECTIONS

parameter	conditions/description	min	typ	max	units
short circuit protection	continuous, auto recovery				

SAFETY AND COMPLIANCE

parameter	conditions/description	min	typ	max	units
isolation voltage	input to output for 1 minute at 1 mA	3,000			Vdc
isolation resistance	input to output at 500 Vdc	1,000			MΩ
isolation capacitance	input to output, 100 kHz / 0.1 V		20		pF
safety approvals	designed to meet 62368: EN, BS EN				
conducted emissions	CISPR32/EN55032 CLASS B				
radiated emissions	CISPR32/EN55032 CLASS B				
ESD	IEC/EN61000-4-2 Air ±8kV, Contact ±6kV				
MTBF	as per MIL-HDBK-217F, 25°C	3,500,000			hours
RoHS	yes				

ENVIRONMENTAL

parameter	conditions/description	min	typ	max	units
operating temperature	see derating curve	-40		85	°C
storage temperature		-55		125	°C
storage humidity	non-condensing	5		95	%
case temperature rise	at 25°C		25		°C

SOLDERABILITY

parameter	conditions/description	min	typ	max	units
reflow soldering	for actual application, refer to IPC/JEDEC J-STD-020D.1			245	°C

DERATING CURVES

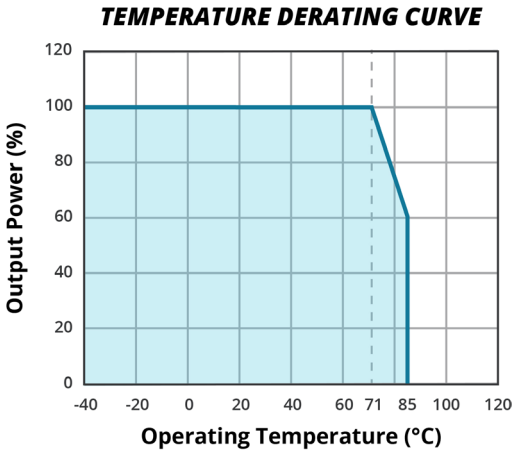

EFFICIENCY CURVES

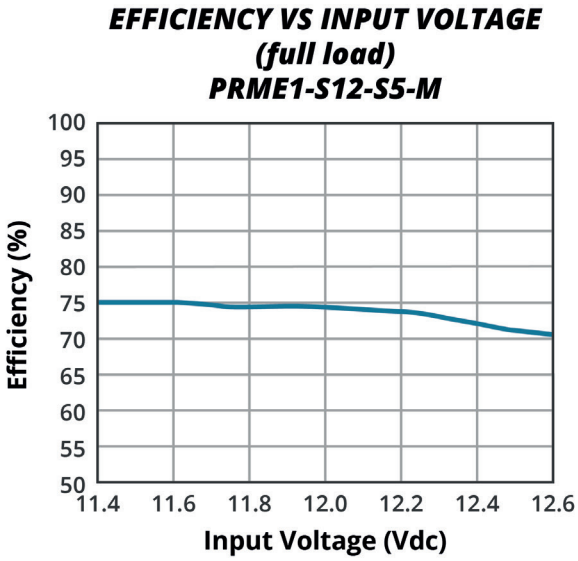

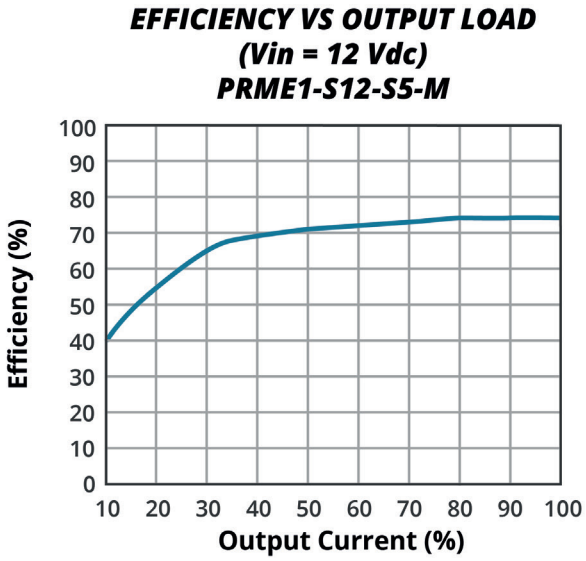

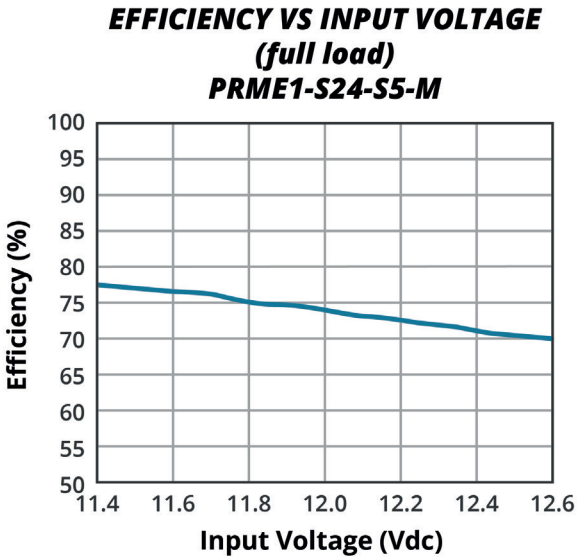

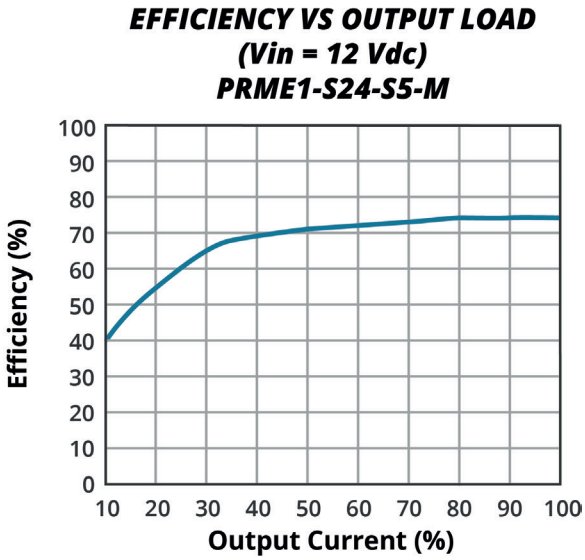

MECHANICAL

parameter	conditions/description	min	typ	max	units
dimensions	15.24 x 11.40 x 7.25 [0.600 x 0.448 x 0.285 inch]				mm
case material	black flame-retardant and heat-resistant plastic (UL94V-0)				
weight			1.2		g

MECHANICAL DRAWING

units: mm [inch]
tolerance: ±0.25 [±0.010]
pin section tolerance: ±0.10 [±0.004]

PIN CONNECTIONS	
PIN	Function
1	GND
2	Vin
4	0V
5	0V
7	+Vo
10	NC

NC = Pin to be isolated from circuitry

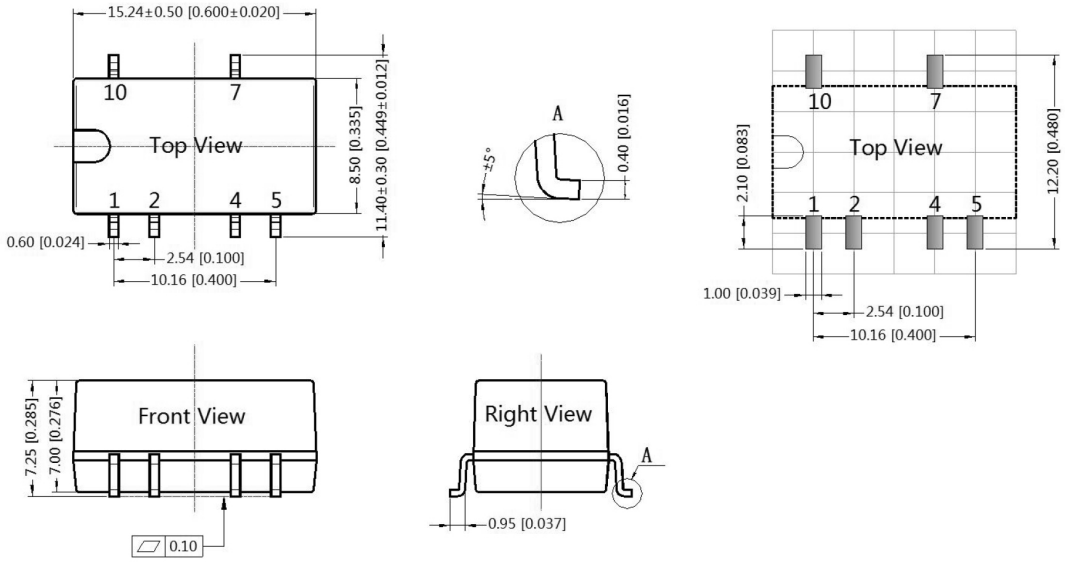

APPLICATION CIRCUIT

If you want to further reduce the input and output ripple, a filter capacitor may be connected to the input and output terminals (Figure 1) provided that the capacitance is less than the maximum capacitive load of the model, otherwise start-up problems may be caused if the capacitance is too large.

Figure 1

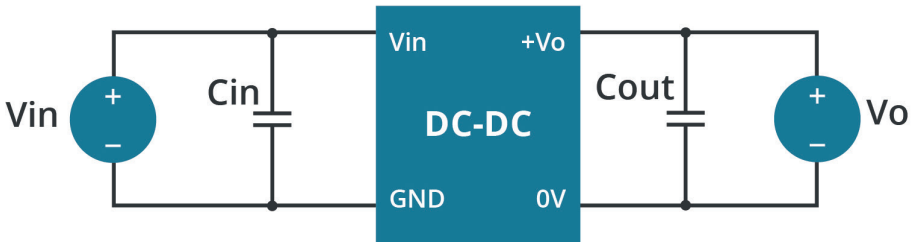

Table 1

Vin (Vdc)	Cin (µF)	Vo (Vdc)	Cout (µF)
12	2.2	5	10
15	1	12	2.2
24	1	15	0.47

EMC RECOMMENDED CIRCUIT

Figure 2

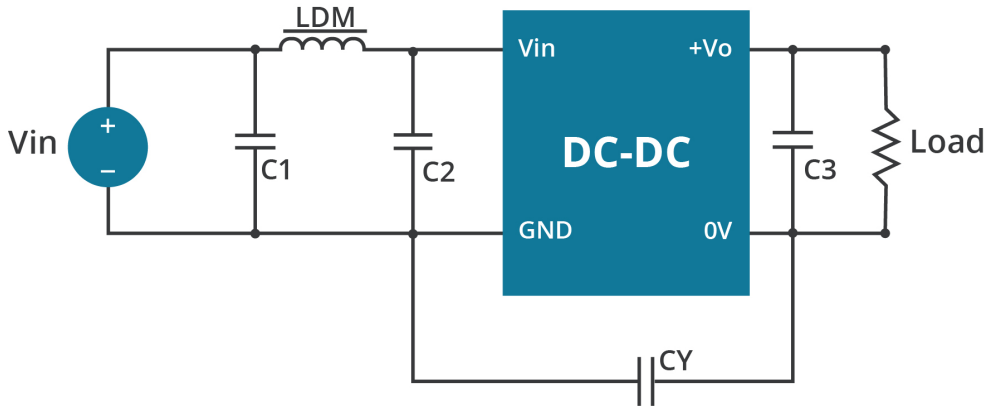

Table 3

Recommended External Circuit Components	
C1, C2	4.7 µF / 25 V
CY	270 pF / 3,000 Vdc
C3	refer to the Cout in Table 1
LDM	6.8 µH

REVISION HISTORY

rev.	description	date
1.0	initial release	09/13/2021
1.01	CE certification updated	12/06/2022

The revision history provided is for informational purposes only and is believed to be accurate.

CUI INC
a bel group

Headquarters
20050 SW 112th Ave.
Tualatin, OR 97062
800.275.4899

Fax 503.612.2383
cui.com
techsupport@cui.com

CUI offers a two (2) year limited warranty. Complete warranty information is listed on our website.

CUI reserves the right to make changes to the product at any time without notice. Information provided by CUI is believed to be accurate and reliable. However, no responsibility is assumed by CUI for its use, nor for any infringements of patents or other rights of third parties which may result from its use.

CUI products are not authorized or warranted for use as critical components in equipment that requires an extremely high level of reliability. A critical component is any component of a life support device or system whose failure to perform can be reasonably expected to cause the failure of the life support device or system, or to affect its safety or effectiveness.