CUDEVICES

MODEL: UJ2-MIBH-4-MSMT | **DESCRIPTION:** USB RECEPTACLE

DISCONTINUED

FEATURES

- USB micro B type jack
- USB 2.0
- horizontal orientation
- mid-mount SMT

RoHS

SPECIFICATIONS

parameter	conditions/description	min	typ	max	units
USB standard	USB 2.0				
rated input voltage				30	Vac
rated input current	pins 1, 5 pins 2, 3, 4			1.8 0.5	A A
contact resistance[2]	between terminals and mating plug			30	mΩ
insulation resistance	at 250 Vdc for 1 minute	100			MΩ
voltage withstand	for 1 minute			250	Vac
insertion force				35	N
withdrawal force		8			N
operating temperature		-25		85	°C
life			10,000		cycles
flammability rating	UL94V-0				
RoHS	yes				

Note:
1. Add suffix "-TR" to the model for tape and reel packaging.
2. When measured at a current of less than 100 mA/1 kHz
3. All specifications measured at 10~35°C, humidity at 45~85%, under standard atmospheric pressure, unless otherwise noted.

SOLDERABILITY

parameter	conditions/description	min	typ	max	units
reflow soldering	see reflow profile	245	250	255	°C

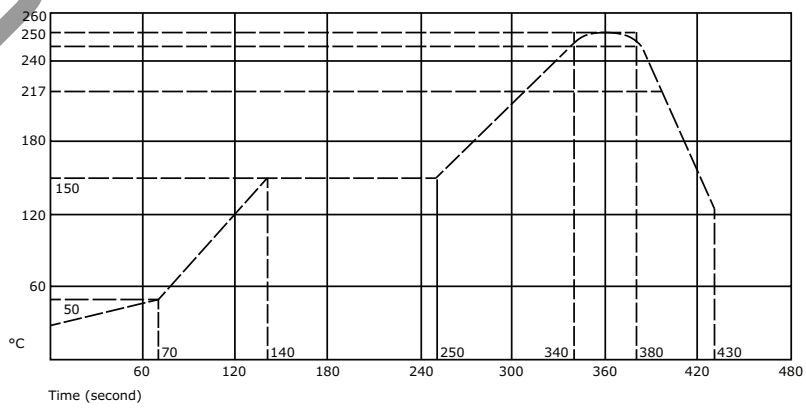

MECHANICAL DRAWING

units: mm
tolerance:
X.X ±0.2 mm
X.XX ±0.1 mm
PCB layout tolerance:
±0.05 mm

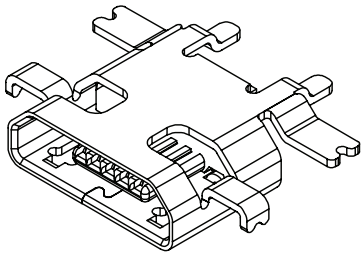

	MATERIAL	PLATING
contact terminals	copper alloy	contact: 30 µ" gold over nickel solder: 30 µ" gold over nickel
shield	stainless steel	nickel
insulator	LCP (black)	

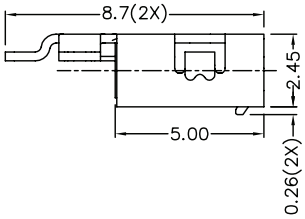

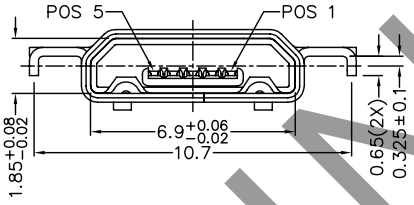

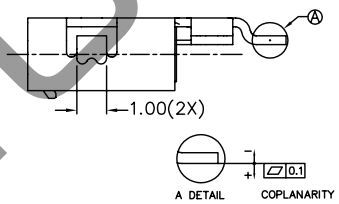

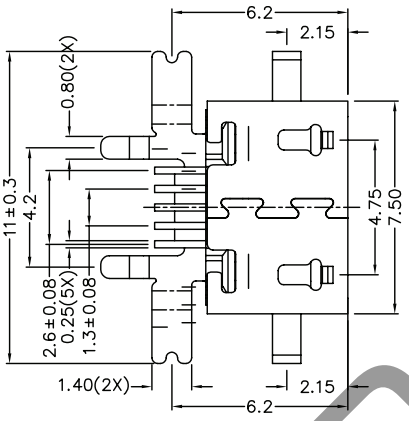

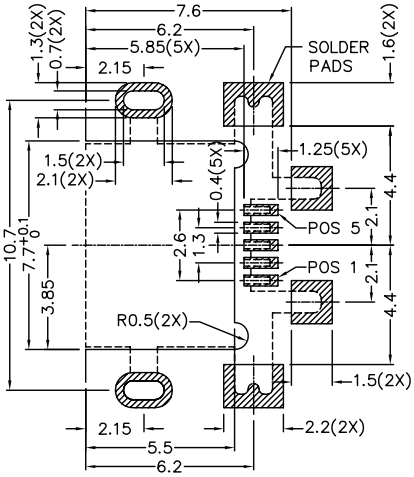

Recommended PCB Layout
Top View

DISCONTINUED

PACKAGING

units: mm

Reel Size: Ø330 mm
Reel QTY: 1,300 pcs per reel

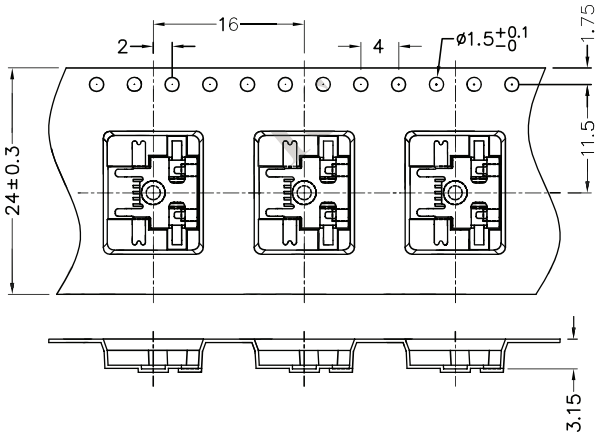

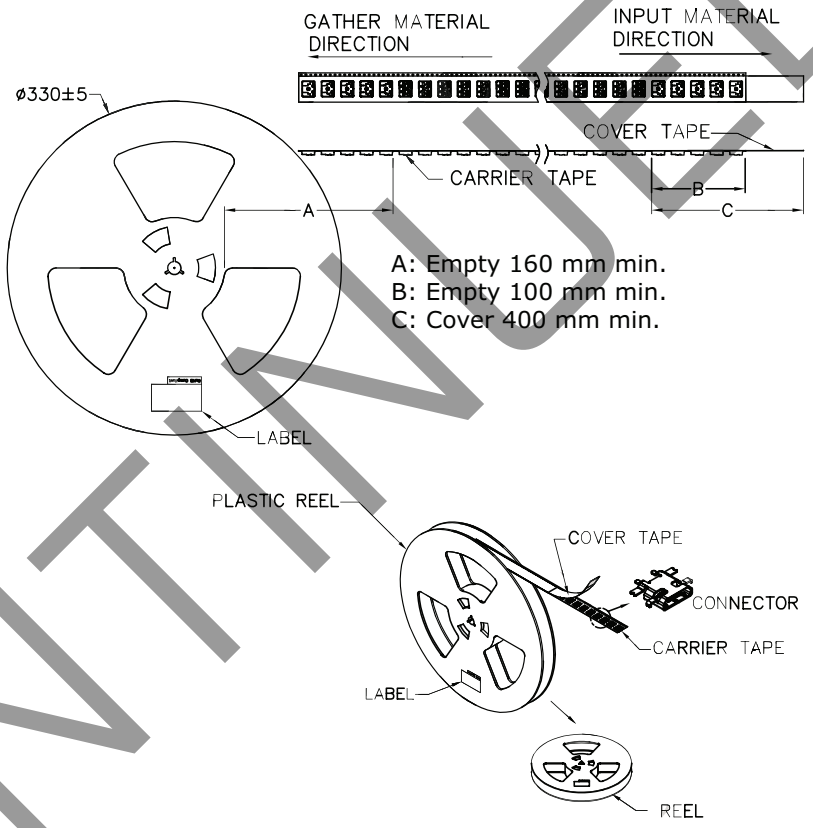

DISCONTINUED

REVISION HISTORY

rev.	description	date
1.0	initial release	08/08/2016
1.01	brand update	02/05/2020
1.02	added USB standard	04/07/2022
1.03	logo, datasheet style update	08/05/2022

The revision history provided is for informational purposes only and is believed to be accurate.

DISCONTINUED

CUI Devices offers a one (1) year limited warranty. Complete warranty information is listed on our website.

CUI Devices reserves the right to make changes to the product at any time without notice. Information provided by CUI Devices is believed to be accurate and reliable. However, no responsibility is assumed by CUI Devices for its use, nor for any infringements of patents or other rights of third parties which may result from its use.

CUI Devices products are not authorized or warranted for use as critical components in equipment that requires an extremely high level of reliability. A critical component is any component of a life support device or system whose failure to perform can be reasonably expected to cause the failure of the life support device or system, or to affect its safety or effectiveness.