CUI INC
a bel group

SERIES: VHK200W | DESCRIPTION: DC-DC CONVERTER

FEATURES

- up to 200 W isolated output
- rugged metal enclosure with integrated heat sink
- 4:1 input range (10~36 Vdc, 18~75 Vdc)
- single output from 12~48 Vdc
- 1,500 Vdc isolation
- over current, over temperature, over voltage, and short circuit protections
- remote on/off
- efficiency up to 88%

RoHS CE

MODEL

MODEL	input voltage range (Vdc)	output voltage (Vdc)	output current max (A)	output power max (W)	ripple and noise[1] max (mVp-p)	efficiency typ (%)
VHK200W-Q24-S12[3]	10 ~ 36	12	16.7	200	150	84
VHK200W-Q24-S15[3]	10 ~ 36	15	13.3	200	150	84
VHK200W-Q24-S24[3]	10 ~ 36	24	8.3	200	240	84
VHK200W-Q24-S28	10 ~ 36	28	7.14	200	280	87
VHK200W-Q24-S48[3]	10 ~ 36	48	4.2	200	480	87
VHK200W-Q48-S12[3]	18 ~ 75	12	16.7	200	150	86
VHK200W-Q48-S15[3]	18 ~ 75	15	13.3	200	150	86
VHK200W-Q48-S24	18 ~ 75	24	8.3	200	240	86
VHK200W-Q48-S28	18 ~ 75	28	7.14	200	280	87
VHK200W-Q48-S48[3]	18 ~ 75	48	4.2	200	480	88

Note:
1. Ripple and noise are measured at full load, 20 MHz BW with 10µF tantalum capacitor and 1µF ceramic capacitor across output. The 48 Vdc output models require a 10uF aluminum capacitor and 1uF ceramic capacitor across the output.
2. An external input capacitor of 470µF for 24 Vdc input models and 47µF for 48 Vdc input models is recommended to reduce input ripple voltage.
3. Model is not CE certified.

PART NUMBER KEY

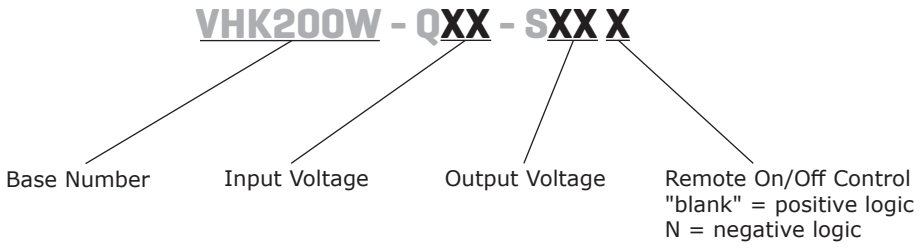

INPUT

parameter	conditions/description		min	typ	max	units
operating input voltage	24 Vdc input models 48 Vdc input models		10 18	24 48	36 75	Vdc Vdc
under voltage shutdown	24 Vdc input	power up power down		9.5 8.5		Vdc Vdc
	48 Vdc input	power up power down		17 16		Vdc Vdc
remote on/off[1]	positive logic	models ON (>3.5 Vdc or REM pin open circuit)				
		models OFF (REM pin 0~1.2 Vdc)				
	negative logic	models ON (REM pin 0~1.2 Vdc)				
		models OFF (>3.5 Vdc or REM pin open circuit)				
filter	pi filter					
input fuse	40A time delay fuse for 24 Vin models, 20A time delay fuse for 48 Vin models					

Note: 1. Open collector refer to -Vin

OUTPUT

parameter	conditions/description	min	typ	max	units
maximum capacitive load	12, 15, & 24 V output models 28 V output models 48 V output models	 100 47		2,200 2,200 2,200	µF µF µF
line regulation[2]	measured from low line to high line			±0.2	%
load regulation[2]	measured from zero load to full load			±0.2	%
voltage accuracy				±1.5	%
adjustability			±10		%
switching frequency			250		kHz
transient response	25% step load change			500	µs
temperature coefficient			±0.03		%/°C

Note: 2. A 100 µF aluminum capacitor is required on the output for the 28 Vdc output models. A 47 µF aluminum capacitor is required on the output for 48 Vdc output models.

PROTECTIONS

parameter	conditions/description	min	typ	max	units
short circuit protection	continuous				
over current protection	at 90% output voltage	110		160	%
over voltage protection		115		140	%
over temperature protection	shutdown		110		°C

SAFETY AND COMPLIANCE

parameter	conditions/description	min	typ	max	units
isolation voltage	for 1 minute: input to output; input to case; output to case	1,500			Vdc
isolation resistance		10			MΩ
safety approvals[3]	certified to 62368-1: EN, IEC				
RoHS	2011/65/EU				

Note: 3. See the model table for additonal info.

ENVIRONMENTAL

parameter	conditions/description	min	typ	max	units
operating temperature	see derating curve	-40		85	°C
storage temperature		-55		105	°C

MECHANICAL

parameter	conditions/description	min	typ	max	units
dimensions	4.23 x 4.01 x 1.50 [107.5 x 101.8 x 38.0 mm]				inch
case material	steel and aluminum extrusion				
weight			502		g

MECHANICAL DRAWING

units: inch[mm]
general tolerance: ±0.04[±1.0]

wire range: 22~12 AWG
screw size: #6-32
connector tightening torque: 1.4 N·m (max)

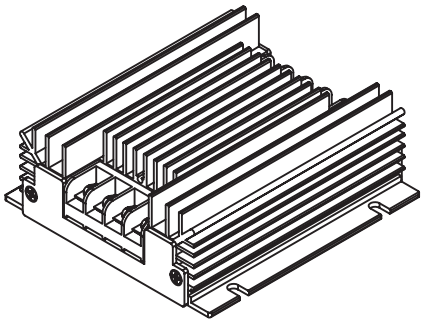

PIN CONNECTIONS	
PIN	FUNCTION
1	-Vo
2	-S
3	trim
4	+S
5	+Vo
6	case
7	REM
8	-Vin
9	+Vin

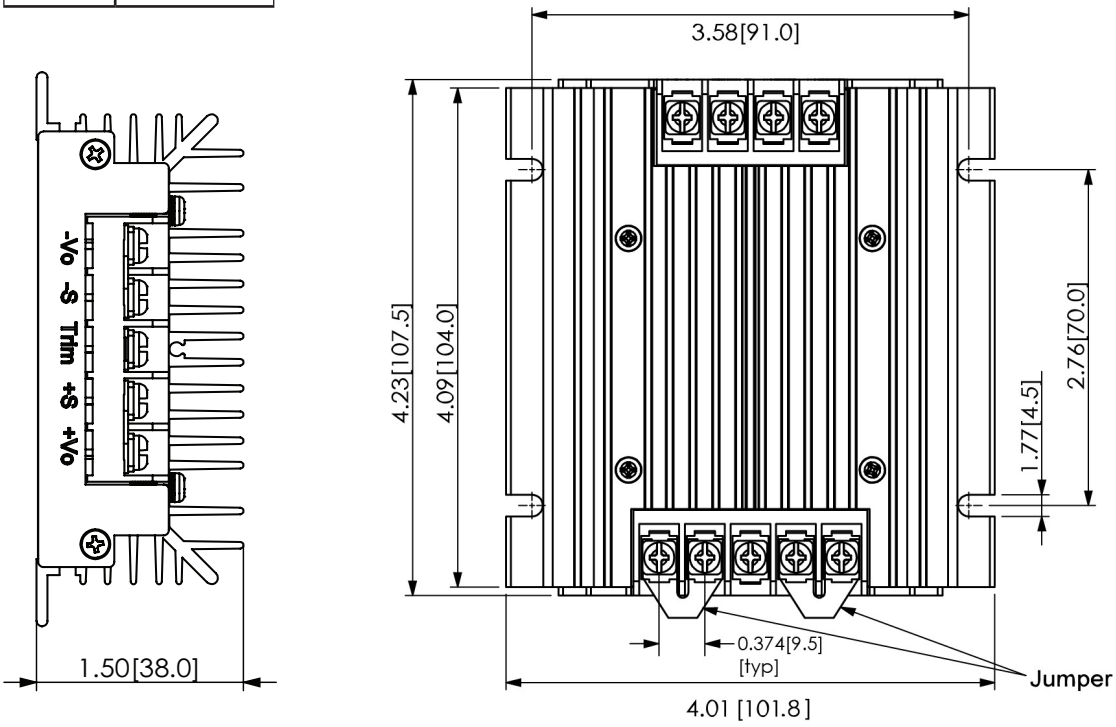

DERATING CURVES

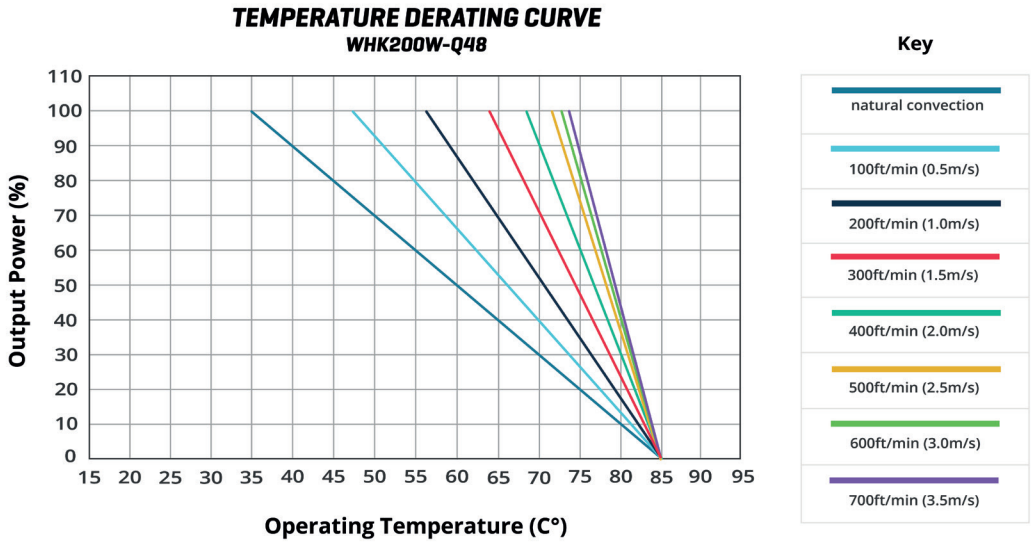

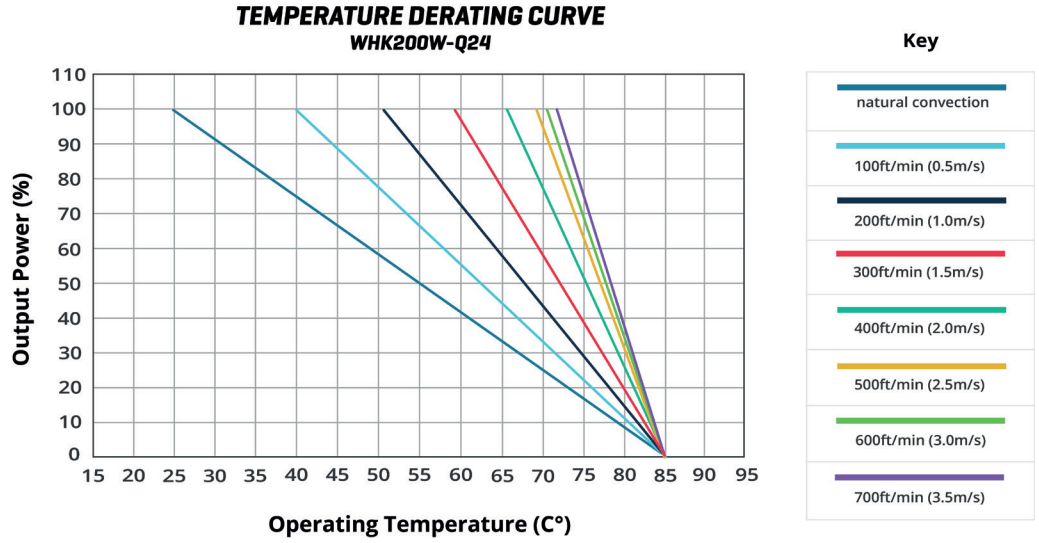

TEST CONFIGURATION

Figure 1

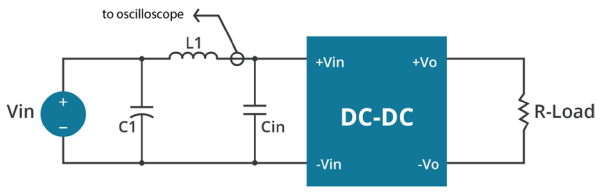

Table 1

External components	
for 24 Vdc input models	
L1	1.2µH
Cin	470µF, ESR < 0.2Ω at 100 KHz
for 48 Vdc input models	
L1	12µH
Cin	47µF, ESR < 0.7Ω at 100 KHz

Note: Input reflected-ripple current is measured with an inductor L1 to simulate source impedance.

EMC RECOMMENDED CIRCUITS

EN55022 CLASS A

Figure 2
Recommended Circuit for EN55022 Class A
(for all 12, 15, 24, & 28 Vdc output models)

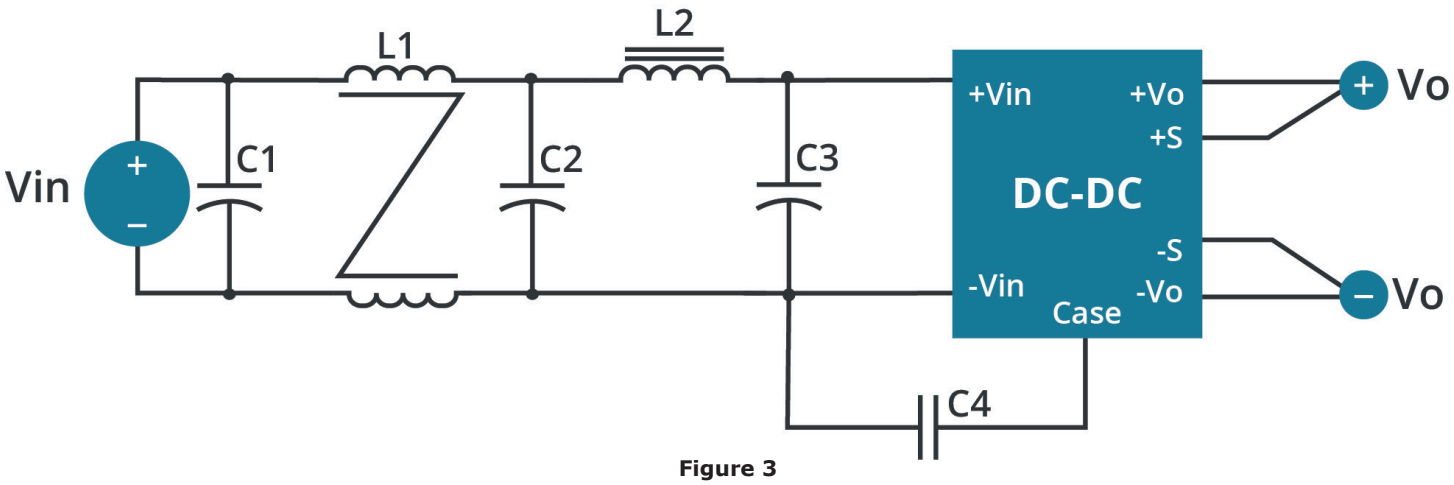

Figure 3
Recommended Circuit for EN55022 Class A
(for all 48 Vdc output models)

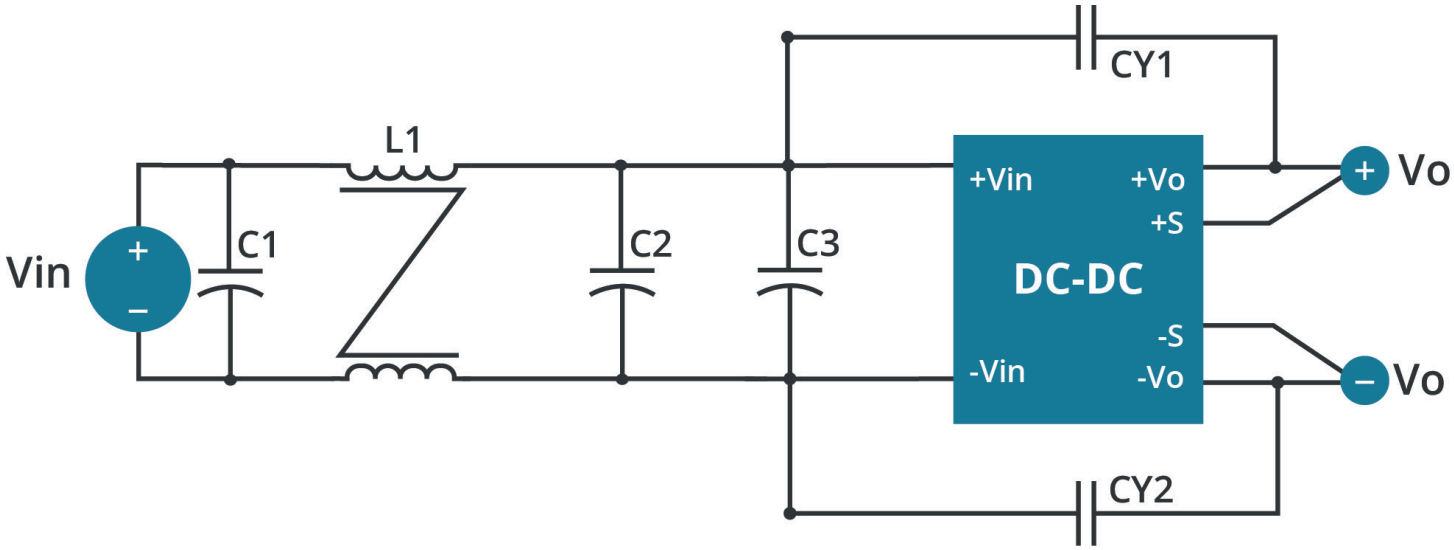

Table 2
Class A Recommended Components

Model	C1[1]	C2[1]	C3[1]	CY1[2]	CY2[2]	L1	L2
VHK200W-Q24-S12	120 µF/100 V	120 µF/100 V	NC	NC	NC	0.5 mH	SHORT
VHK200W-Q24-S15	47 µF/100 V	47 µF/100 V	NC	NC	NC	0.5 mH	SHORT
VHK200W-Q24-S24	100 µF/100 V	100 µF/100 V	NC	NC	NC	0.5 mH	SHORT
VHK200W-Q24-S28	100 µF/100 V	100 µF/100 V	NC	NC	NC	0.5 mH	SHORT
VHK200W-Q24-S48	100 µF/100 V	100 µF/100 V	100 µF/100 V	680 pF/2 KV	680 pF/2 KV	1.0 mH	NC
VHK200W-Q48-S12	82 µF/100 V	82 µF/100 V	NC	NC	NC	0.5 mH	SHORT
VHK200W-Q48-S15	82 µF/100 V	82 µF/100 V	NC	NC	NC	0.5 mH	SHORT
VHK200W-Q48-S24	82 µF/100 V	82 µF/100 V	NC	NC	NC	0.7 mH	SHORT
VHK200W-Q48-S28	150 µF/100 V	150 µF/100 V	NC	NC	NC	0.5 mH	SHORT
VHK200W-Q48-S48	100 µF/100 V	100 µF/100 V	100 µF/100 V	680 pF/2 KV	680 pF/2 KV	1.0 mH	NC

Notes: 1. Aluminum capacitors.
2. Ceramic capacitors.

APPLICATION NOTES

1. **Output Voltage Trimming**
   Leave open if not used.

Figure 4

Trim up

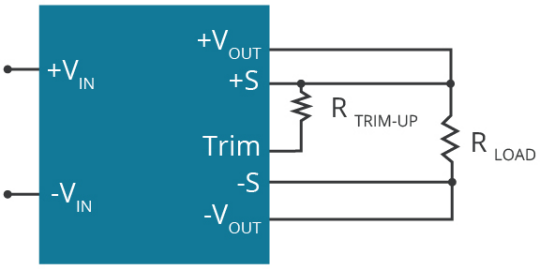

Trim down

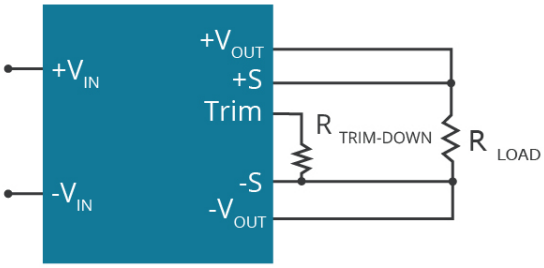

$$\Delta\% = \left(\frac{V_{OUT} - V_{OUT,\,NOM}}{V_{OUT,\,NOM}} \right) 100$$

Trim-Up Formula
(for all 12, 15, 24, & 28[1] Vdc Output Models)

$$R_{TRIM} = \left(\frac{5.11 V_{OUT,\,NOM}\,(100 + \Delta\%)}{1.225 \times \Delta\%} - \frac{511}{\Delta\%} - 10.22 \right) (K\,\Omega)$$

Trim-Up Formula
(for all 48 Vdc Output Models)

$$R_{TRIM} = \left(\frac{20 V_{OUT,\,NOM}\,(100 + \Delta\%)}{1.225 \times \Delta\%} - \frac{2000}{\Delta\%} - 40 \right) (K\,\Omega)$$

Formula for Trim up

$$\Delta\% = \left(\frac{V_{OUT,\,NOM} - V_{OUT}}{V_{OUT,\,NOM}} \right) 100$$

Trim-Down Formula
(for all 12, 15, 24, & 28[1] Vdc Output Models)

$$R_{TRIM} = \left(\frac{511}{\Delta\%} - 10.22 \right) (K\,\Omega)$$

Trim-Down Formula
(for all 48 Vdc Output Models)

$$R_{TRIM} = \left(\frac{2000}{\Delta\%} - 40 \right) (K\,\Omega)$$

Formula for Trim down

Note: R_{TRIM} is the external resistor in KΩ
$V_{OUT,\,NOM}$ is the nominal output voltage
V_{OUT} is the desired output voltage

Notes: 1. For the 28 Vdc output models, a minimum input voltage of 10.8 Vdc is required to trim the 24 Vdc input models up 10%, and a minimum input voltage of 19 Vdc is required to trim the 48 Vdc input models up 10%.
2. All specifications are measured at Ta=25°C, nominal input voltage and full output load unless otherwise specified.

REVISION HISTORY

rev.	description	date
1.0	initial release	10/11/2006
1.01	new template applied	12/21/2011
1.02	misc. updates and corrections	03/13/2012
1.03	updated mechanical drawing	03/27/2012
1.04	V-Infinity branding removed	06/27/2012
1.05	updated spec	03/18/2013
1.06	updated spec	05/08/2013
1.07	added trimming and EMI information	12/16/2013
1.08	trim equation updated	11/13/2020
1.09	derating curves updated	03/04/2021
1.10	pin connection table & remote on/off updated	05/20/2021
1.11	circuit figures updated	09/07/2021
1.12	safety approvals updated	03/02/2022
1.13	mechanical tolerance updated	05/09/2022
1.14	output voltage trimming updated	06/15/2023
1.15	safeties updated	07/26/2023
1.16	safeties updated	09/18/2023

The revision history provided is for informational purposes only and is believed to be accurate.

CUI INC
a bel group

Headquarters
20050 SW 112th Ave.
Tualatin, OR 97062
800.275.4899

Fax 503.612.2383
cui.com
techsupport@cui.com

CUI offers a two (2) year limited warranty. Complete warranty information is listed on our website.

CUI reserves the right to make changes to the product at any time without notice. Information provided by CUI is believed to be accurate and reliable. However, no responsibility is assumed by CUI for its use, nor for any infringements of patents or other rights of third parties which may result from its use.

CUI products are not authorized or warranted for use as critical components in equipment that requires an extremely high level of reliability. A critical component is any component of a life support device or system whose failure to perform can be reasonably expected to cause the failure of the life support device or system, or to affect its safety or effectiveness.