CUDEVICES

MODEL: CEM-1201S | **DESCRIPTION:** MAGNETIC BUZZER TRANSDUCER

FEATURES

- through hole
- 1.5 V rated
- externally driven

RoHS

SPECIFICATIONS

parameter	conditions/description	min	typ	max	units
rated voltage	Vo-p 0V		1.5		Vo-p
operating voltage		1.0		3.0	Vo-p
current consumption	at rated voltage, 2,400 Hz square wave, ½ duty			40	mA
rated frequency			2,400		Hz
sound pressure level	at 10 cm (A-weight), rated voltage, 2,400 Hz square wave, ½ duty	80	88		dBA
coil resistance		13	16	19	Ω
dimensions	Ø12.0 x 9.5				mm
weight			1.6		g
material	PBT				
terminal	pin type (Au plating)				
operating temperature		-20		60	°C
storage temperature		-30		70	°C
washable	yes				
RoHS	yes				

Notes: 1. All specifications measured at 5~35°C, humidity at 45~85%, under 86~106 kPa pressure, unless otherwise noted.

SOLDERABILITY

parameter	conditions/description	min	typ	max	units
hand soldering	for maximum 2 seconds	330		380	°C
wave soldering	see wave solder profile	255	260	265	°C

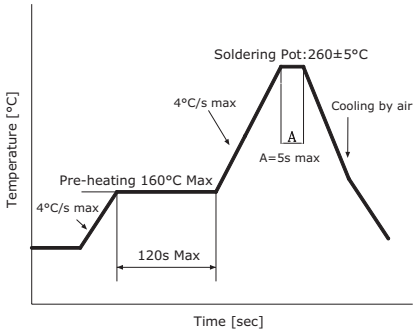

MECHANICAL DRAWING

units: mm
tolerance: ±0.5 mm

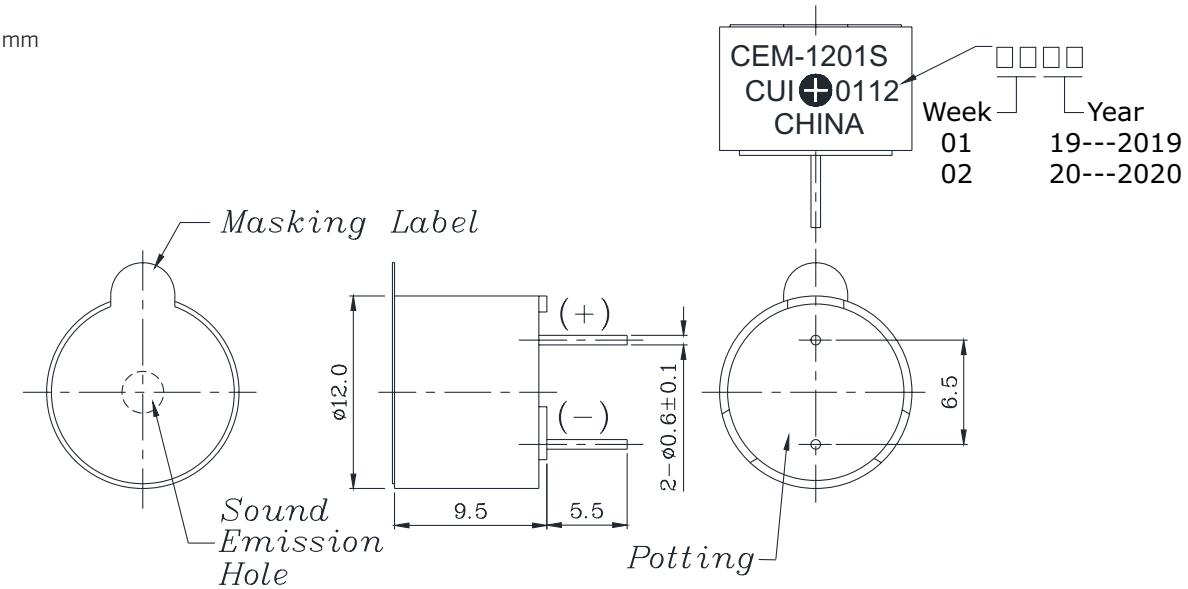

FREQUENCY RESPONSE CURVE

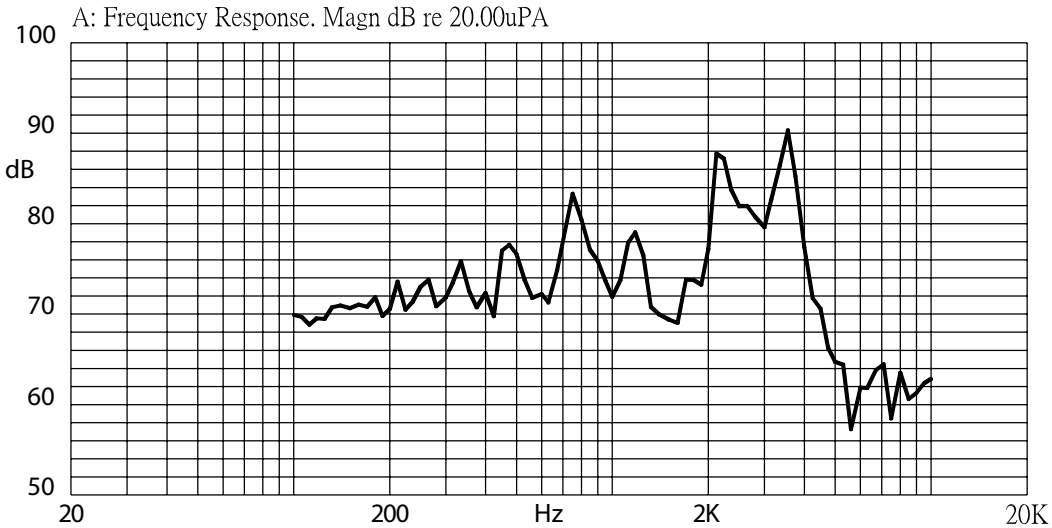

APPLICATION CIRCUIT

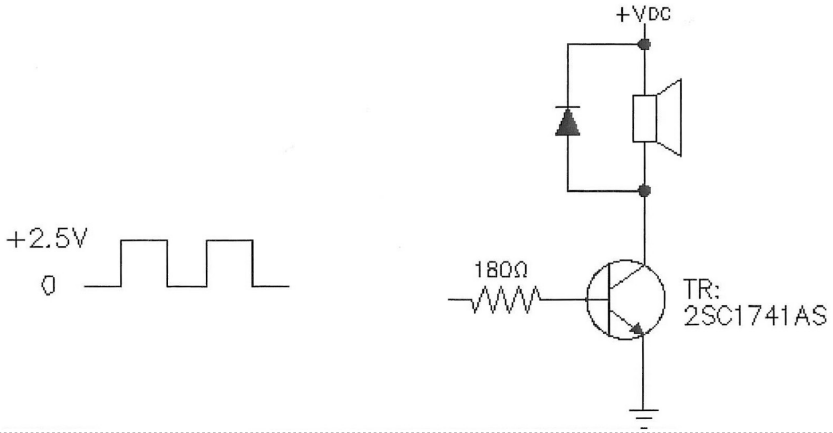

REVISION HISTORY

rev.	description	date
1.0	initial release	09/06/2006
1.01	brand update	12/20/2019
1.02	logo, datasheet style update	08/05/2022

The revision history provided is for informational purposes only and is believed to be accurate.

CUI Devices offers a one (1) year limited warranty. Complete warranty information is listed on our website.

CUI Devices reserves the right to make changes to the product at any time without notice. Information provided by CUI Devices is believed to be accurate and reliable. However, no responsibility is assumed by CUI Devices for its use, nor for any infringements of patents or other rights of third parties which may result from its use.

CUI Devices products are not authorized or warranted for use as critical components in equipment that requires an extremely high level of reliability. A critical component is any component of a life support device or system whose failure to perform can be reasonably expected to cause the failure of the life support device or system, or to affect its safety or effectiveness.