MODEL: GF0876 | DESCRIPTION: SPEAKER

FEATURES

- 87 mm
- square frame
- 2.0 W
- 8 Ω
- ferrite magnet
- paper cone

SPECIFICATIONS

parameter	conditions/description	min	typ	max	units
input power			2.0	3.0	W
impedance	at 0.8 kHz, 1.0 V	6.8	8	9.2	Ω
resonant frequency (Fo)	at 1.0 V	256	320	384	Hz
frequency response		Fo		17,000	Hz
sound pressure level	at 1.0 W, 50 cm, avg at 1.0, 1.4, 1.7, 2.0 kHz	96	99	102	dB
buzz, rattle, etc.	must be normal at sine wave			4.0	V
dimensions	87 x 87 x 32.5				mm
magnet	ferrite				
cone material	paper				
terminal	solder eyelets				
weight			140		g
operating temperature		-25		70	°C
storage temperature		-40		80	°C
hand soldering	for maximum 5 seconds	400	420	440	°C
RoHS	yes				

MECHANICAL DRAWING

units: mm
tolerance: ±0.8 mm

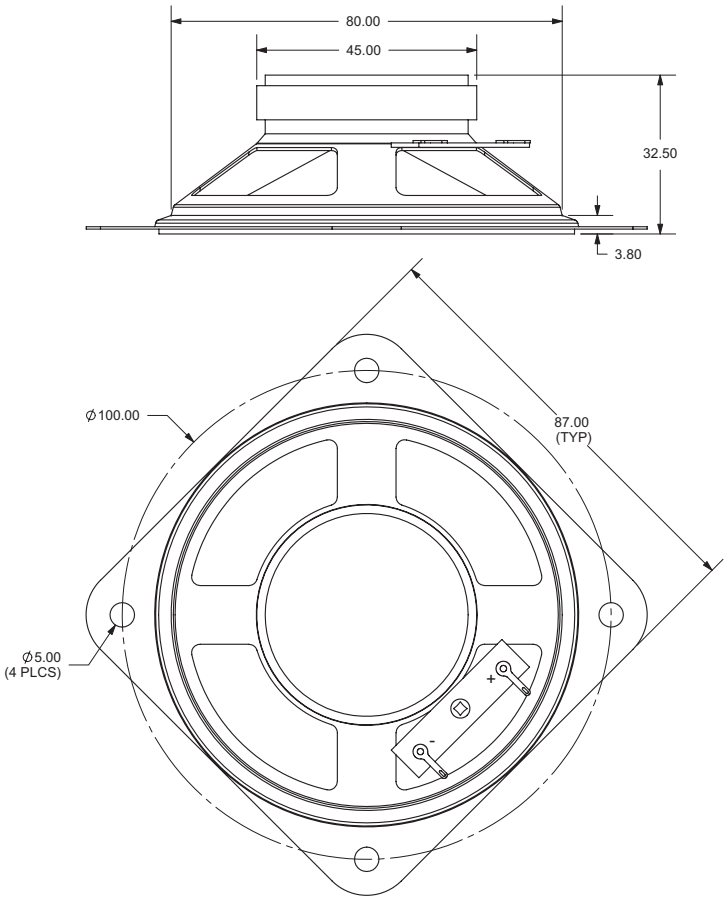

FREQUENCY RESPONSE CURVE

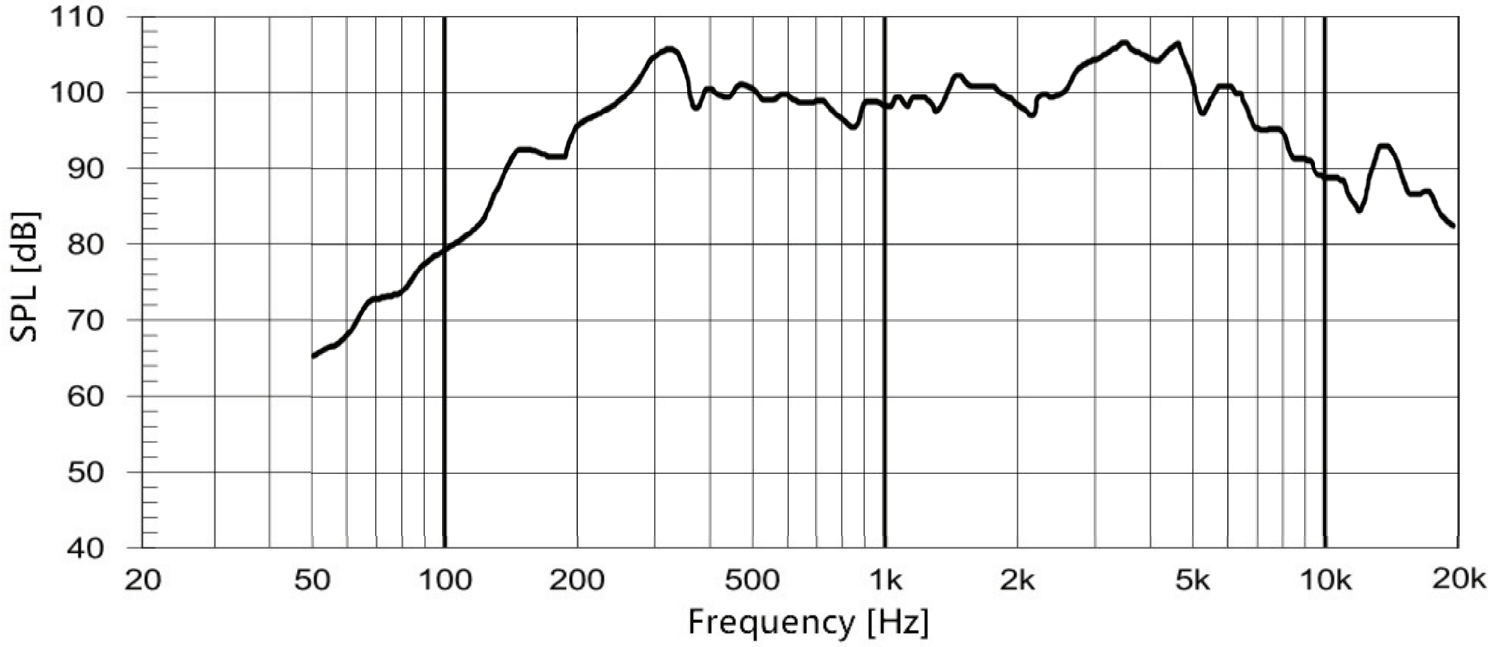

REVISION HISTORY

rev.	description	date
1.0	initial release	09/18/2006
1.01	applied new spec template, added operating & storage temperatures	05/16/2013
1.02	brand update	03/18/2020
1.03	modified cone design, modified resonant frequency & frequency response	01/01/2021
1.04	modified cone design	06/07/2021
1.05	logo, datasheet style update	08/05/2022

The revision history provided is for informational purposes only and is believed to be accurate.

CUI Devices offers a one (1) year limited warranty. Complete warranty information is listed on our website.

CUI Devices reserves the right to make changes to the product at any time without notice. Information provided by CUI Devices is believed to be accurate and reliable. However, no responsibility is assumed by CUI Devices for its use, nor for any infringements of patents or other rights of third parties which may result from its use.

CUI Devices products are not authorized or warranted for use as critical components in equipment that requires an extremely high level of reliability. A critical component is any component of a life support device or system whose failure to perform can be reasonably expected to cause the failure of the life support device or system, or to affect its safety or effectiveness.