CUIDEVICES

MODEL: PJ-014DH-SMT-TR | **DESCRIPTION:** DC POWER JACK

FEATURES

- low profile
- 3.5 A current rating

RoHS

SPECIFICATIONS

parameter	conditions/description	min	typ	max	units
rated input voltage			24		Vdc
rated input current				3.5	A
contact resistance				30	mΩ
insulation resistance	at 500 Vdc	100			MΩ
voltage withstand	for 1 minute			500	Vac
insertion/withdrawal force		0.3		2	kg
operating temperature		-25		85	°C
life			5,000		cycles
flammability rating	UL94V-0				
RoHS	yes				

SOLDERABILITY

parameter	conditions/description	min	typ	max	units
reel storage	10~30°C, <70% humidity				°C
reflow soldering[1]	see reflow profile	255	260		°C
drying conditions[2]	parts in reel: bake at 110°C for 4 hours parts removed from reel: bake at 110°C for 4 hours				

Note:
1. CUI Devices recommends to solder within 72 hours from opening vacuum packaging at a temperature <30°C & relative humidity <60%.
2. When exceeding floor life by >240 hours.

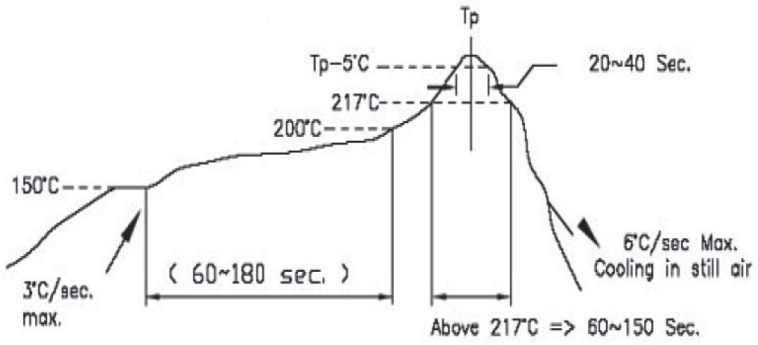

* Time 25°C to Peak Temp. ---- 8 Minutes Max.
* Time within 5°C of Actual Peak Temp. -- 20~40 Seconds

MECHANICAL DRAWING

units: mm
tolerance:
X. ±0.15 mm
X.X ±0.10 mm
X.XX ±0.05 mm
PCB: ±0.10 mm
unless otherwise specified

DESCRIPTION	MATERIAL	PLATING/COLOR
center pin	brass	silver
terminal 1	brass t=0.50	silver
terminal 2	bronze t=0.25	silver
terminal 3	brass t=0.50	silver
housing	PA10T (UL94V-0)	black

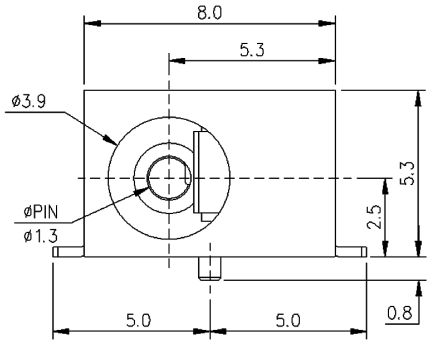

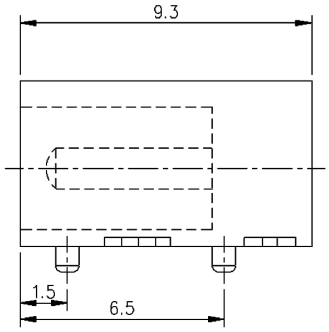

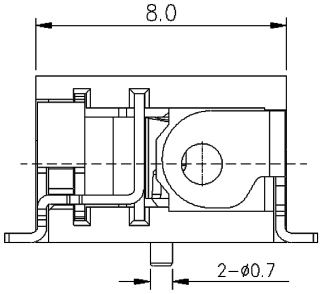

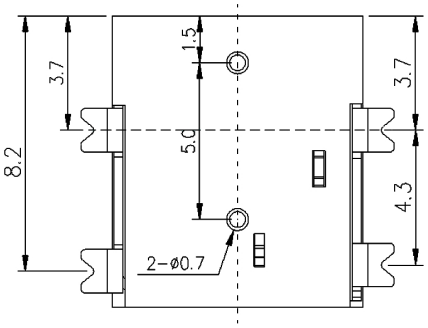

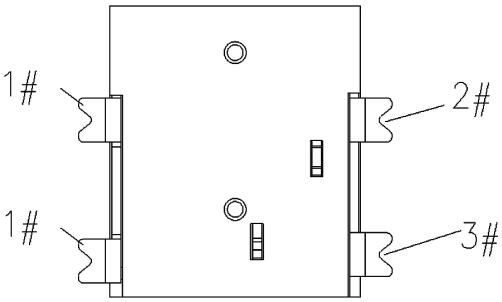

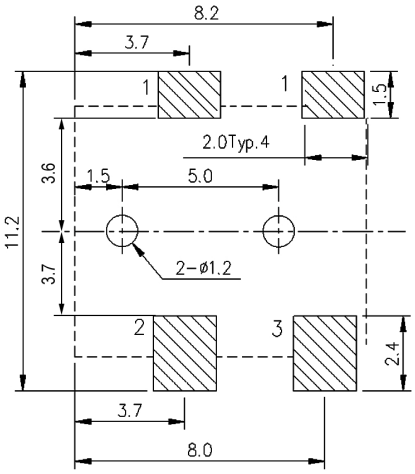

Recommended PCB Layout
Top View

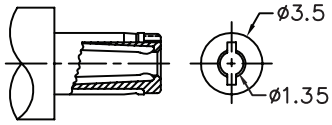

MATING PLUG
Jack Insertion Depth: 5.9 mm

Schematic	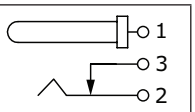
Model	PJ-014DH-SMT-TR
Center Pin	Ø1.3 mm

PACKAGING

units: mm

Reel Size: Ø330 mm
Reel QTY: 700 pcs per reel

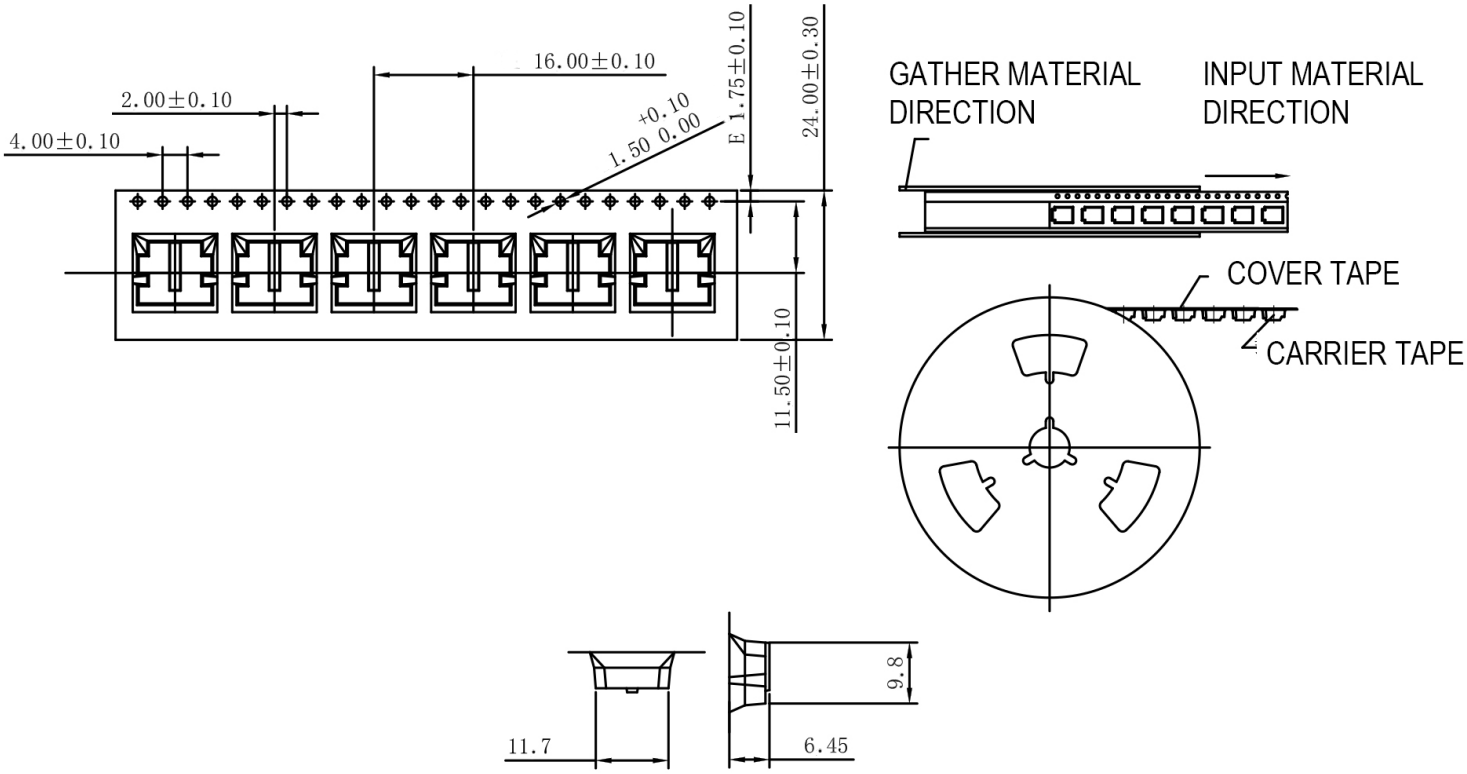

REVISION HISTORY

rev.	description	date
1.0	initial release	10/13/2005
1.01	updated template	06/24/2011
1.02	added TR package option	11/20/2012
1.03	increased voltage rating	05/03/2016
1.04	added storage and drying conditions, and tape and reel packaging details	08/30/2017
1.05	brand update	10/24/2019
1.06	logo, datasheet style update	08/05/2022
1.07	product reengineered for improved manufacturability and production yield, see PCN for details	12/19/2022

The revision history provided is for informational purposes only and is believed to be accurate.

CUI Devices offers a one (1) year limited warranty. Complete warranty information is listed on our website.

CUI Devices reserves the right to make changes to the product at any time without notice. Information provided by CUI Devices is believed to be accurate and reliable. However, no responsibility is assumed by CUI Devices for its use, nor for any infringements of patents or other rights of third parties which may result from its use.

CUI Devices products are not authorized or warranted for use as critical components in equipment that requires an extremely high level of reliability. A critical component is any component of a life support device or system whose failure to perform can be reasonably expected to cause the failure of the life support device or system, or to affect its safety or effectiveness.