CUI INC
a bel group

SERIES: PYBJ3 | DESCRIPTION: DC-DC CONVERTER

FEATURES

- 3W isolated output
- ultra-wide input voltage range
- single regulated output
- high efficiency up to 82%
- output short circuit, over current, over voltage protection
- 1500 Vdc isolation
- available with or without case
- designed to meet EN/BS EN 62368

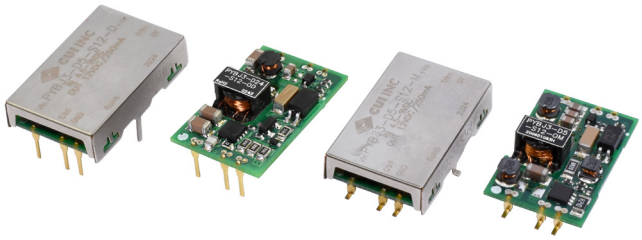

RoHS

MODEL

MODEL	input voltage		output voltage	output current		output power	ripple & noise	efficiency[2]
	typ (Vdc)	range (Vdc)	(Vdc)	min (mA)	max (mA)	max (W)	max (mVp-p)	typ (%)
PYBJ3-D5-S5	5	4.5~9	5	0	600	3	100	72
PYBJ3-D5-S12	5	4.5~9	12	0	250	3	100	76
PYBJ3-D5-S15	5	4.5~9	15	0	200	3	100	77
PYBJ3-D5-S24	5	4.5~9	24	0	125	3	100	76
PYBJ3-D24-S3	24	9~36	3.3	0	600	2	100	72
PYBJ3-D24-S5	24	9~36	5	0	600	3	100	77
PYBJ3-D24-S12	24	9~36	12	0	250	3	100	81
PYBJ3-D24-S15	24	9~36	15	0	200	3	100	82
PYBJ3-D24-S24	24	9~36	24	0	125	3	100	81

Notes: 1. PYBJ3-Dxx-Sxx-x contains 4 types of products, include DIP package without case, DIP package with case, SMD package without case and SMD package with case.
2. Efficiency is measured In nominal input voltage and rated output load.

PART NUMBER KEY

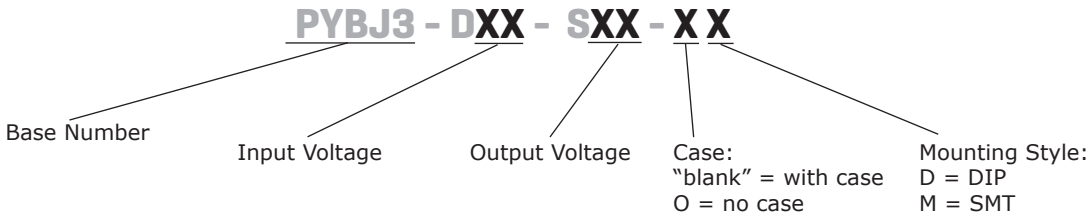

INPUT

parameter	conditions/description	min	typ	max	units
operating input voltage[1]	5 Vdc input models 24 Vdc input models			12 40	Vdc Vdc
start-up voltage	5 Vdc input models 24 Vdc input models			4.5 9	Vdc Vdc
surge voltage	5 Vdc input models for maximum of 1 second 24 Vdc input models for maximum of 1 second	-0.7 -0.7		16 50	Vdc Vdc
current	5 Vdc input models, full load 24 Vdc input models, full load			857 169	mA
filter	5 Vdc input models - LC filter 24 Vdc input models - C filter				
CTRL	module on: CTRL pin open or pulled low (0~0.3 Vdc) module off: CTRL pin pulled high (2~12 Vdc) input current when switched off		5	10	mA

Notes: 1. Exceeding maximum input voltage may cause permanent damage.

OUTPUT

parameter	conditions/description	min	typ	max	units
maximum capacitive load	model D5-S5 D5-S12 D5-S15 D5-S24 D24-S3 D24-S5 D24-S12 D24-S15 D24-S24			 470 220 100 47 1000 1000 470 330 100	 µF µF µF µF µF µF µF µF µF
voltage accuracy	0% ~ 100% load			±2	%
line regulation	input voltage variation from low to high at full load			±0.5	%
load regulation	5% ~ 100% load			±1	%
switching frequency	PWM mode		330		kHz
transient recovery time	25% load step change, nominal input voltage		300	500	µs
transient response deviation	25% load step change, nominal input voltage 3.3 Vdc output 5 Vdc output other outputs		 ±5 ±5 ±3	 ±10 ±8 ±5	 % % %
temperature coefficient	at full load			±0.03	%/°C
trim			±5		%

PROTECTIONS

parameter	conditions/description	min	typ	max	units
over voltage protection		110		160	%
over current protection		110	160	250	%
short circuit protection	output shutdown, auto recovery				

SAFETY AND COMPLIANCE

parameter	conditions/description	min	typ	max	units
isolation voltage	input to output for 1 minute at 5 mA	500			Vac
	input to case for 1 minute at 5 mA	500			Vac
	output to case for 1 minute at 5 mA	500			Vac
	input to output for 1 minute at 1 mA	1,500			Vdc
	input to case for 1 minute at 1 mA	1,500			Vdc
	output to case for 1 minute at 1 mA	1,500			Vdc
isolation resistance	input to output	100			MΩ
	input to case	100			MΩ
	output to case	100			MΩ
isolation capacitance	input to output, 100 kHz / 0.1 V		1,000		pF
safety approvals	designed to meet 62368: EN, BS EN				
EMI/EMC	CISPR32/EN55032 class B (see Fig.3-2 for recommended circuit)				
ESD	IEC/EN61000-4-2 Contact ±6KV perf. criteria B				
radiated immunity	IEC/EN61000-4-3 10V/m perf. criteria A				
EFT/burst	IEC/EN61000-4-4 ±2KV (see Fig.3-1 for recommended circuit) perf. criteria B				
surge	IEC/EN61000-4-5 line to line ±2KV (see Fig.3-1 for recommended circuit) perf. criteria B				
conducted immunity	IEC/EN61000-4-6 3 Vr.m.s perf. criteria A				
MTBF	as per MIL-HDBK-217F, 25°C	1,000			K hours
RoHS	yes				

ENVIRONMENTAL

parameter	conditions/description	min	typ	max	units
operating temperature	see derating curve	-40		85	°C
storage temperature		-55		125	°C
storage humidity	non-condensing	5		95	%
vibration	10-55Hz			5	G

MECHANICAL

parameter	conditions/description	min	typ	max	units
dimensions	DIP without case: 24.00 x 15.10 x 6.19 [0.944 x 0.594 x 0.243 inch] DIP with case: 25.00 x 16.40 x 6.80 [0.984 x 0.645 x 0.267 inch] SMT without case: 26.20 x 15.10 x 6.19 [1.031 x 0.594 x 0.243 inch] SMT with case: 26.20 x 16.40 x 6.80 [1.031 x 0.645 x 0.267 inch]				mm mm mm mm
case material	aluminum alloy				
weight	DIP without case, SMT without case DIP with case, SMT with case		2.2 3.5		g g

MECHANICAL DRAWING (DIP WITHOUT CASE)

units: mm [inch]
tolerance: ±0.50[±0.020]
pin diameter tolerance: ±0.10[±0.004]

PIN Out	
PIN	Function
1	Vin
2	Ctrl
3	GND
4	0V
5	Trim
6	+Vo

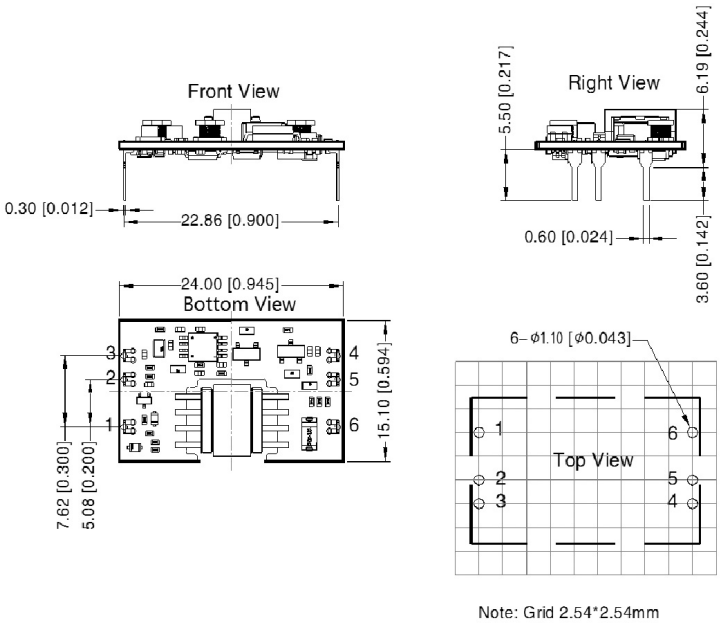

MECHANICAL DRAWING (DIP WITH CASE)

units: mm [inch]
tolerance: ±0.50[±0.020]
pin diameter tolerance: ±0.10[±0.004]

PIN Out	
PIN	Function
1	Vin
2	Ctrl
3	GND
4	0V
5	Trim
6	+Vo

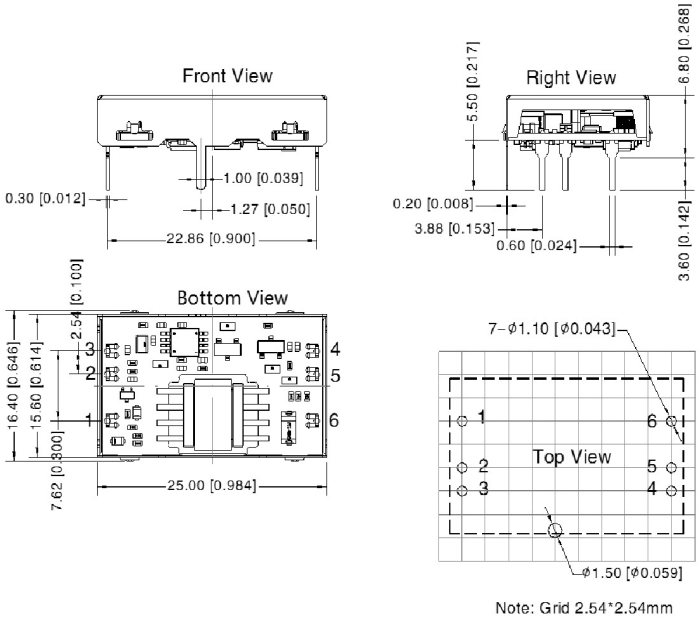

MECHANICAL DRAWING (SMT WITHOUT CASE)

units: mm [inch]
tolerance: ±0.50[±0.020]
pin diameter tolerance: ±0.10[±0.004]

PIN Out	
PIN	Function
1	Vin
2	Ctrl
3	GND
4	0V
5	Trim
6	+Vo

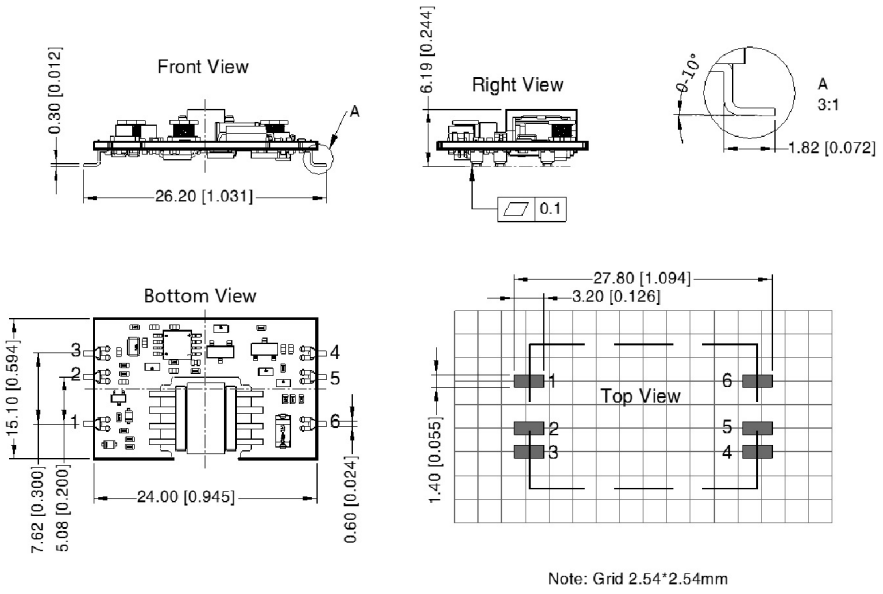

MECHANICAL DRAWING (SMT WITH CASE)

units: mm [inch]
tolerance: ±0.50[±0.020]
pin diameter tolerance: ±0.10[±0.004]

PIN Out	
PIN	Function
1	Vin
2	Ctrl
3	GND
4	0V
5	Trim
6	+Vo

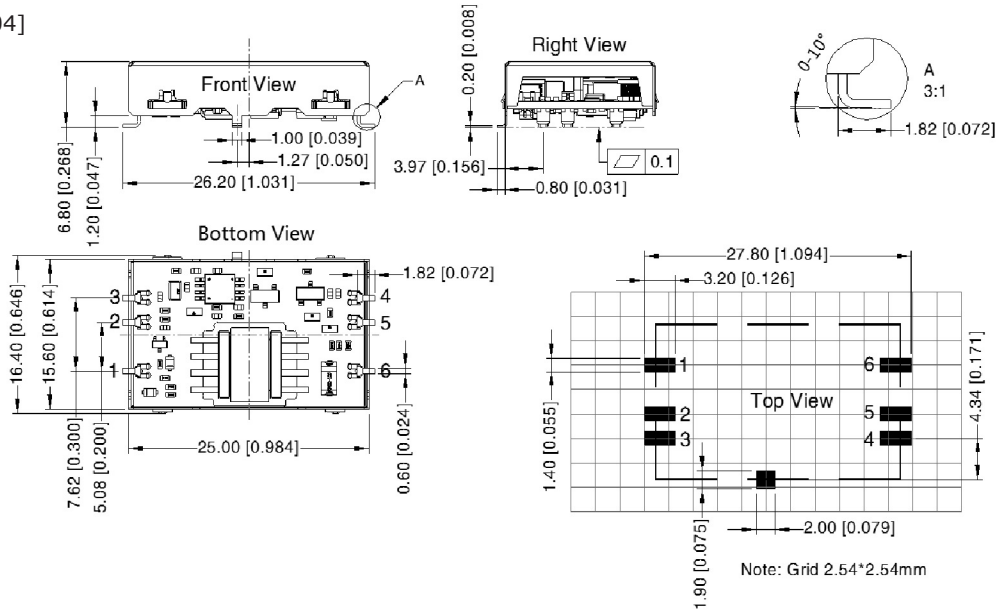

DERATING CURVES

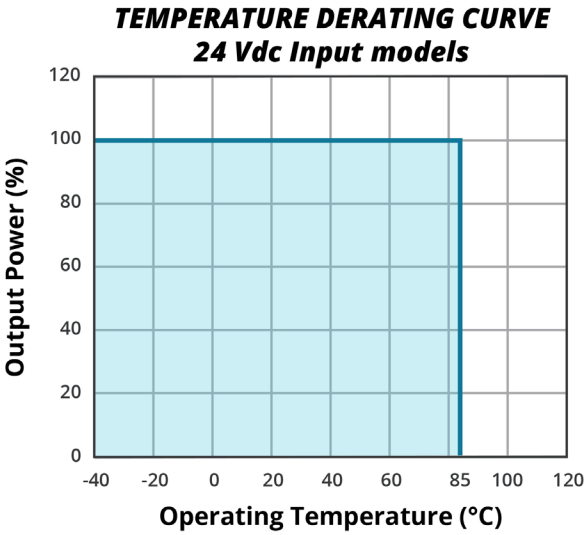

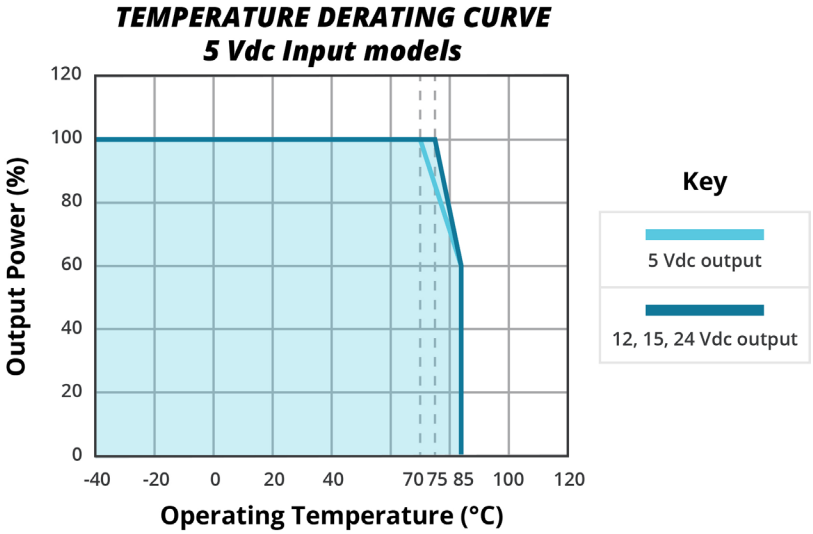

APPLICATION CIRCUIT

All the DC-DC converters of this series are tested before delivery using the recommended circuit shown in Fig. 2. Input and/or output ripple can be further reduced by appropriately increasing the input & output capacitor values Cin and Cout and/or by selecting capacitors with a low ESR (equivalent series resistance). Also make sure that the capacitance is not exceeding the max. capacitive load value of the product.

Figure 1

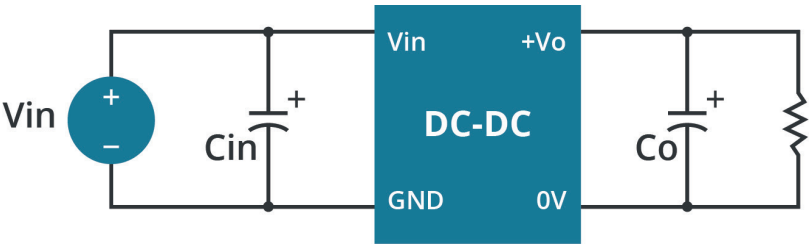

Table 1

Vout (Vdc)	Cin (µF)	Cout (µF)
3.3	10	100
5		
12		
15		
24		

EMC RECOMMENDED CIRCUIT

Figure 2

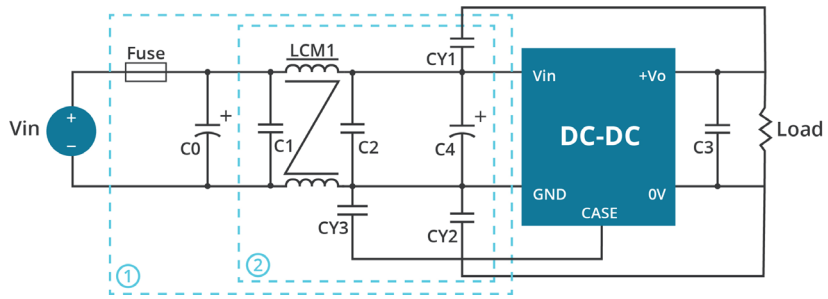

Table 2

Recommended External Circuit Components		
Vin (Vdc)	5	24
FUSE	choose according to actual input current	
C0	2200µF/35V	1000µF/50V
C1	4.7µF/50V	
C2	4.7µF/50V	
C4	100µF/50V	220µF/50V
C3	Refer to the Cout in Fig.2	
LCM1	2.2mH	
CY1/CY2/CY3	2.2nF/2kV	

APPLICATION NOTES

Figure 3

Trim up

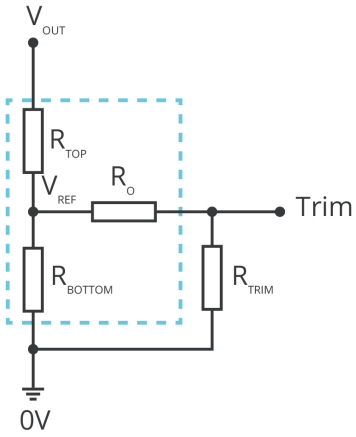

$$R_{TRIM} = \frac{a \cdot R_{BOTTOM}}{R_{BOTTOM} - a} - R_O \qquad a = \frac{V_{REF}}{V_{OUT} - V_{REF}} \cdot R_{TOP}$$

Formula for Trim up

Trim down

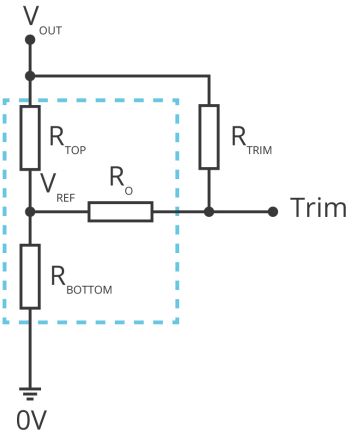

$$R_{TRIM} = \frac{a \cdot R_{TOP}}{R_{TOP} - a} - R_O \qquad a = \frac{V_{OUT} - V_{REF}}{V_{REF}} \cdot R_{BOTTOM}$$

Formula for Trim down

Table 3

V_{OUT}	R_{TOP}	R_{BOTTOM}	R_O	V_{REF}
(Vdc)	(kΩ)	(kΩ)	(kΩ)	(V)
3.3	4.80	2.87	10	1.25
5	2.87	2.87	10	2.5
12	10.91	2.87	15	2.5
15	14.35	2.87	15	2.5
24	24.77	2.87	17.4	2.5

Note: Value for R_{TOP}, R_{BOTTOM}, R_O, and V_{REF} refer to Table 3 (fixed internal values).
R_{TRIM}: Trim resistance
a: User-defined parameter, no actual meanings
V_{OUT}: Nominal output voltage

REVISION HISTORY

rev.	description	date
1.0	initial release	07/16/2020
1.01	derating curves and circuit figures updated, CTRL pin polarity updated	08/09/2021
1.02	product image & application section updated	11/08/2022
1.03	CE certification removed	12/05/2022
1.04	temperature coefficient updated	01/10/2023

The revision history provided is for informational purposes only and is believed to be accurate.

CUI INC
a bel group

Headquarters
20050 SW 112th Ave.
Tualatin, OR 97062
800.275.4899

Fax 503.612.2383
cui.com
techsupport@cui.com

CUI offers a two (2) year limited warranty. Complete warranty information is listed on our website.

CUI reserves the right to make changes to the product at any time without notice. Information provided by CUI is believed to be accurate and reliable. However, no responsibility is assumed by CUI for its use, nor for any infringements of patents or other rights of third parties which may result from its use.

CUI products are not authorized or warranted for use as critical components in equipment that requires an extremely high level of reliability. A critical component is any component of a life support device or system whose failure to perform can be reasonably expected to cause the failure of the life support device or system, or to affect its safety or effectiveness.