CUI INC
a bel group

SERIES: VMS-160 | **DESCRIPTION:** AC-DC POWER SUPPLY

FEATURES

- up to 160 W continuous power
- industry standard 2" x 4" footprint
- 18 W/in³ power density
- universal input (85~264 Vac / 125~373 Vdc)
- single output from 5~48 V
- active power correction (98%)
- 12 V auxiliary fan output
- no minimum load required
- over load, over voltage, and short circuit protections
- full medical and ITE safety approvals
- efficiency up to 90%

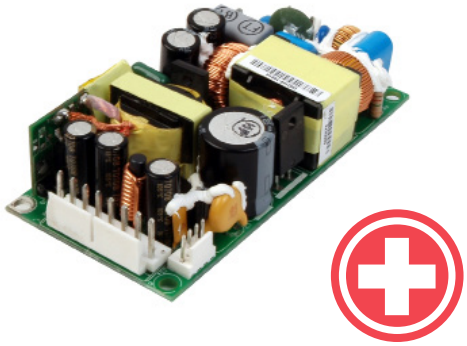

MODEL	output voltage (Vdc)	output current max (A)	output power max (W)	ripple and noise[4] max (mVp-p)	efficiency typ (%)
VMS-160-5	5	20	100[1]	50	90
VMS-160-12	12	13.3	160[3]	120	90
VMS-160-15*	15	8	120[2]	50	90
VMS-160-24	24	6.66	160[3]	240	90
VMS-160-48*	48	3.33	160[3]	480	90

Notes:
1. Total continuous output power will not exceed 100 W forced air (400 LFM), 70 W without fan.
2. Total continuous output power will not exceed 120 W forced air (400 LFM), 90 W without fan.
3. Total continuous output power will not exceed 160 W forced air (400 LFM), 100 W without fan.
4. Measured at 20 MHz, twisted pair with 0.47 µF ceramic and 22 µF tantalum parallel capacitors.
5. * Discontinued model.

PART NUMBER KEY

VMS-160 - XX

Base Number — Output Voltage

INPUT

parameter	conditions/description	min	typ	max	units
voltage		90 125		264 373	Vac Vdc
frequency		47		63	Hz
current	at 100 Vac, cold start at 200 Vac, cold start			2.5 1.25	A A
inrush current	at 230 Vac, full load, cold start				
power factor correction	measured at full load and 115 Vac/60 Hz and 230 Vac/50 Hz input source input will be less than 0.25Ω, compliant to EN61000-3-2 for harmonic currents	0.85	0.98		

OUTPUT

parameter	conditions/description	min	typ	max	units
line regulation	low line to high line		±1		%
load regulation	all other outputs 12 V aux. output		±1 ±20		% %
temperature coefficient			0.25		mV/°C
transient response	25% I_{max} to I_{max} , 0.1 A/μs slew rate, ±5% max. deviation, 1 ms recovery				
start-up			1		s
rise time		0.2		20	ms
hold-up		16			ms
adjustability			±5		%
fan drive	12 Vdc / 500 mA for external fan				

PROTECTIONS

parameter	conditions/description	min	typ	max	units
over voltage protection				130	%
over current protection	automatically recovers			150	%
short circuit protection	auto recovery with no damage from a short on any output				

SAFETY & COMPLIANCE

parameter	conditions/description	min	typ	max	units
isolation voltage	primary to secondary (for 1 second): primary to earth ground (for 1 second):	5,656 5,656			Vdc Vdc
safety approvals	UL 60950-1/60601-1, NEMKO EN 60950-1/EN 60601-1, CE				
EMI/EMC	EN 55022:1998 (Class B, conducted), EN 61000-3-2: 2000, EN 61000-3-3: A1:2001, EN 55024 (IEC 61000-4-2: 1995, IEC 61000-4-3: 1995, IEC 61000-4-4: 1995, IEC 61000-4-5: 1995, IEC 61000-4-6: 1996, IEC 61000-4-11: 1994)				
leakage current	measured per IEC 60950-1, paragraph 5.1, test voltage of 120 Vac/60 Hz			275	μA
MTBF	with 400 LFM forced air, MIL-HDBK-217E-1, 75% of rated full load, 25°C ambient	200,000			hrs
RoHS	2011/65/EU				

ENVIRONMENTAL

parameter	conditions/description	min	typ	max	units
operating temperature	see derating curve	-20		70	°C
storage temperature	see derating curve	-40		80	°C
operating humidity storage humidity	non-condensing non-condensing	8		90 95	% %
shock	operating (11 ms, half sine, for a total of 6 shock inputs) non-operating (2 ms, half sine, for a total of 6 shock inputs)		10 140		G G
vibration	operating (10 ~ 300 Hz, 1 hour per axis, 3 hours total) non-operating (10 ~ 500 Hz, 1 hour per axis, 3 hours total)		1 2		Grms Grms

DERATING CURVE

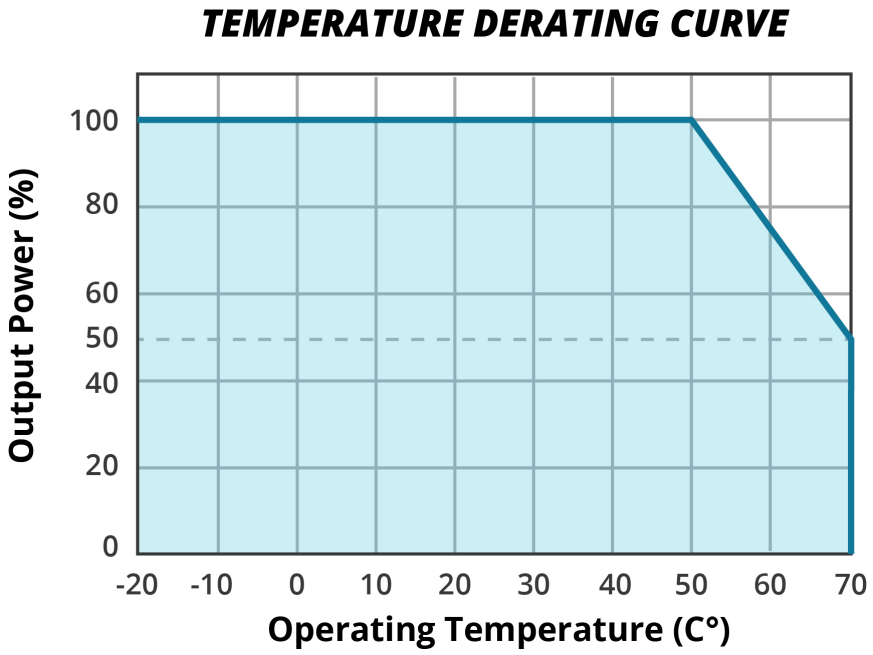

MECHANICAL DRAWING

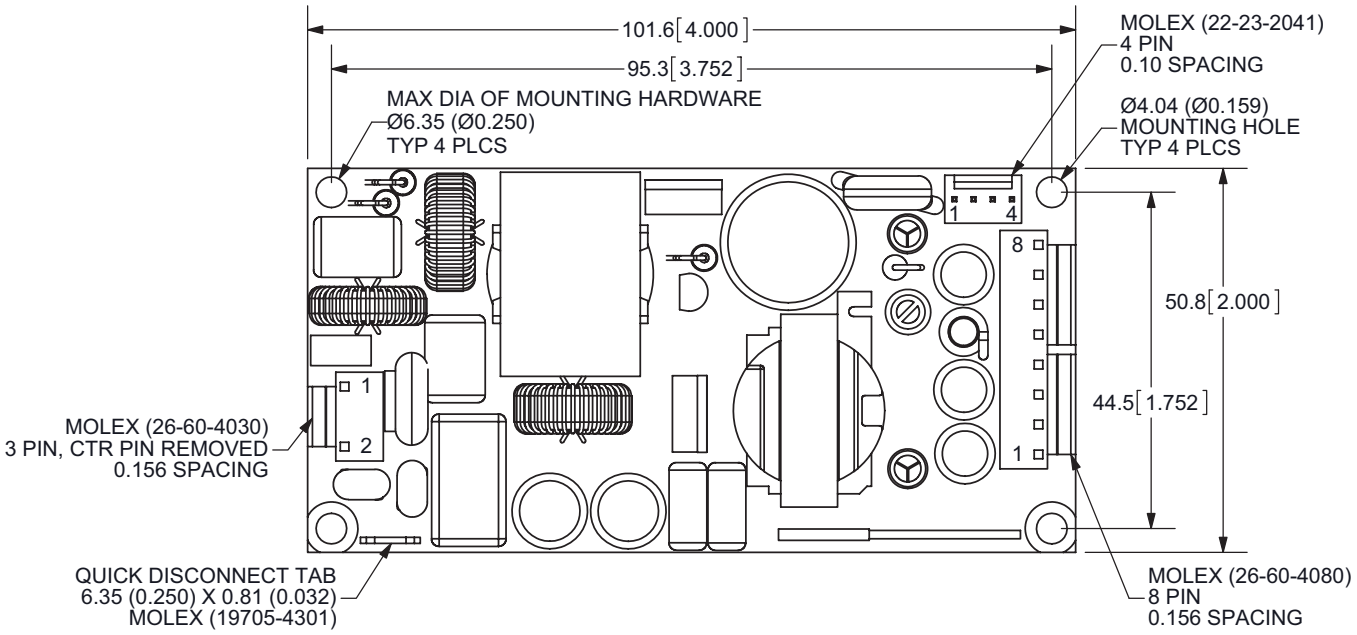

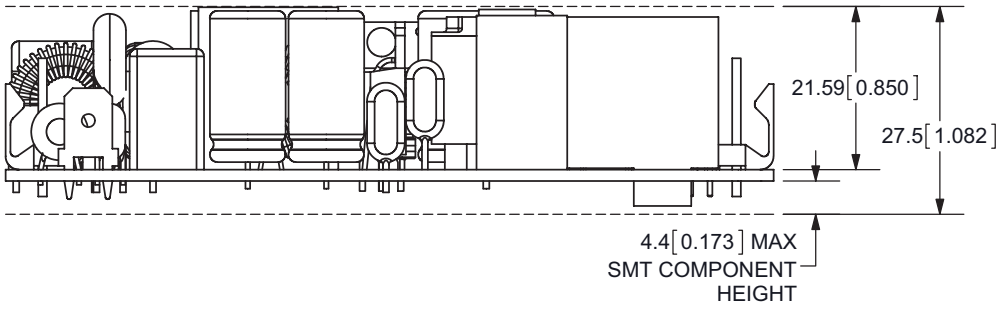

CN1	
1	ac neutral
2	ac line

CN3	
1	GND
2	GND
3	12V (fan)
4	12V (fan)

CN2	
1	dc return
2	dc return
3	dc return
4	dc return
5	V1
6	V1
7	V1
8	V1

REVISION HISTORY

rev.	description	date
1.0	initial release	05/5/2009
1.01	new template applied	06/16/2011
1.02	V-Infinity branding removed	08/15/2012
1.03	corrected power output data, updated derating curve	11/02/2012
1.04	corrected CN3 connector part number	12/04/2012
1.05	updated EMI/EMC section	01/30/2014
1.06	updated datasheet	07/01/2016
1.07	company logo updated	12/21/2020
1.08	derating curve updated	05/06/2021
1.09	discontinued models VMS-160-48 & VMS-160-15	07/13/2022

The revision history provided is for informational purposes only and is believed to be accurate.

CUI INC
a bel group

Headquarters
20050 SW 112th Ave.
Tualatin, OR 97062
800.275.4899

Fax 503.612.2383
cui.com
techsupport@cui.com

CUI offers a two (2) year limited warranty. Complete warranty information is listed on our website.

CUI reserves the right to make changes to the product at any time without notice. Information provided by CUI is believed to be accurate and reliable. However, no responsibility is assumed by CUI for its use, nor for any infringements of patents or other rights of third parties which may result from its use.

CUI products are not authorized or warranted for use as critical components in equipment that requires an extremely high level of reliability. A critical component is any component of a life support device or system whose failure to perform can be reasonably expected to cause the failure of the life support device or system, or to affect its safety or effectiveness.