CUDEVICES

MODEL: CPI-5029-105T | **DESCRIPTION:** PIEZO BUZZER INDICATOR

FEATURES

- through hole
- 105 dB
- piezo
- internally driven

RoHS

SPECIFICATIONS

parameter	conditions/description	min	typ	max	units
rated voltage			12		Vdc
operating voltage		5		13	Vdc
current consumption	at rated voltage			75	mA
rated frequency	at rated voltage	2,000	2,500	3,000	Hz
sound pressure level	at 30 cm, rated voltage	105			dB
tone	single				
dimensions	Ø50 x 29				mm
weight			28.0		g
material	ABS				
terminal	pins (phosphor bronze with tin plating)				
operating temperature		-20		60	°C
storage temperature		-30		70	°C
RoHS	yes				

Notes: 1. All specifications measured at 25±3°C, humidity at 60~70%, under 86~106 kPa pressure, unless otherwise noted.

SOLDERABILITY

parameter	conditions/description	min	typ	max	units
hand soldering		370	380	390	°C

MECHANICAL DRAWING

units: mm
tolerance: ±0.5 mm

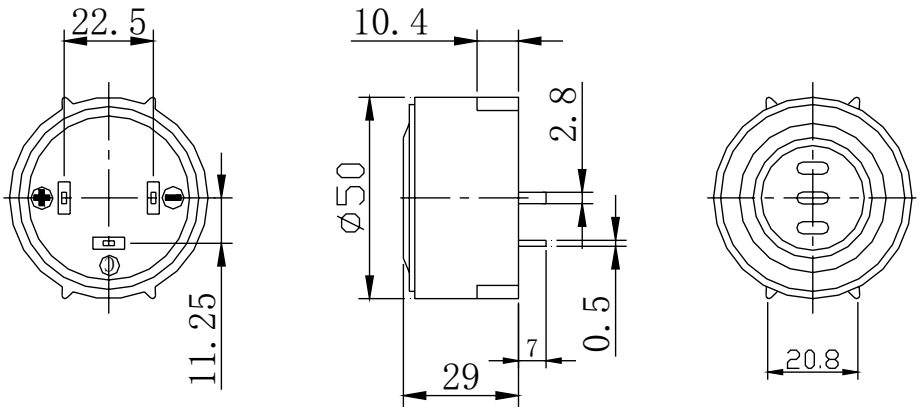

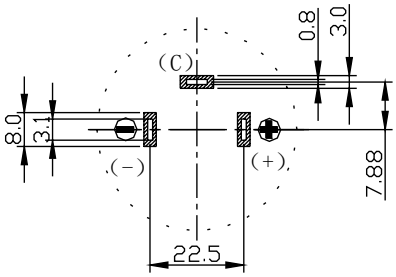

Recommended PCB Layout
Top View

Note: Control pin (C) must be connected to positive terminal (+) to operate.

PERFORMANCE CURVES

SPL: Voltage vs. Sound Pressure Level
I: Voltage vs. Current Consumption

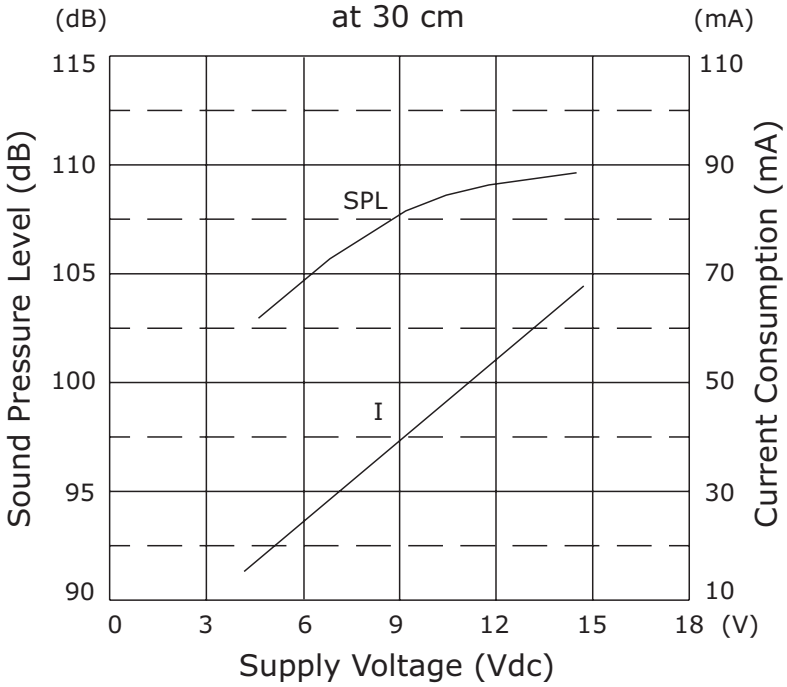

PACKAGING

units: mm

Carton Size: 315 x 310 x 300 mm
Carton QTY: 120 pcs per carton

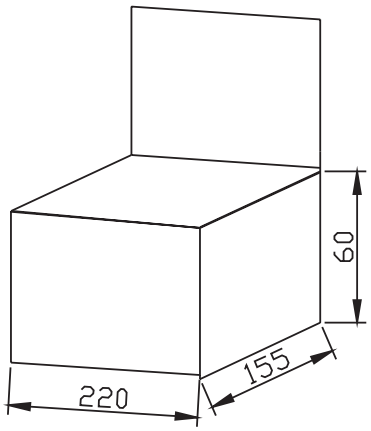

4×3PCS=12PCS/box

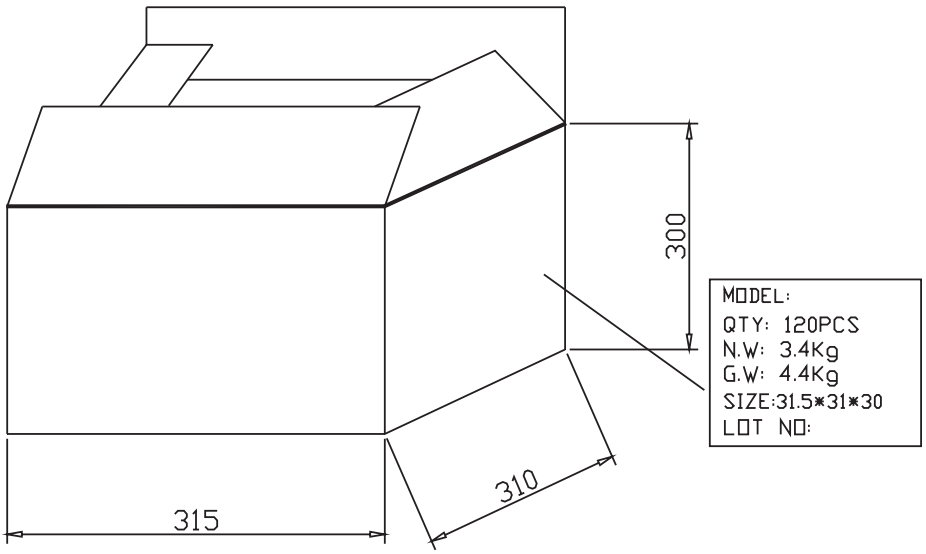

120PCS/CARTON

REVISION HISTORY

rev.	description	date
1.0	initial release	07/18/2019
1.01	brand update	01/02/2020
1.02	logo, datasheet style update	08/05/2022

The revision history provided is for informational purposes only and is believed to be accurate.

CUI Devices offers a one (1) year limited warranty. Complete warranty information is listed on our website.

CUI Devices reserves the right to make changes to the product at any time without notice. Information provided by CUI Devices is believed to be accurate and reliable. However, no responsibility is assumed by CUI Devices for its use, nor for any infringements of patents or other rights of third parties which may result from its use.

CUI Devices products are not authorized or warranted for use as critical components in equipment that requires an extremely high level of reliability. A critical component is any component of a life support device or system whose failure to perform can be reasonably expected to cause the failure of the life support device or system, or to affect its safety or effectiveness.