CUDEVICES

SERIES: HSE-BX-04H | DESCRIPTION: HEAT SINK

FEATURES

- TO-220 or TO-218 package
- placement pins for secure PCB attachment
- round hole for component attachment
- multiple available cut lengths

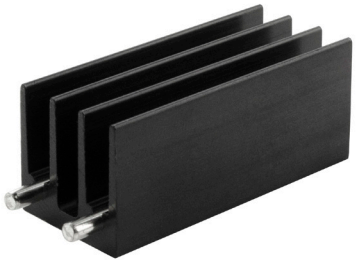

RoHS

MODEL

	length (mm)	thermal resistance[1] @ 75°C ΔT, nat conv (°C/W)	@ 1 W, nat conv (°C/W)	@ 1 W, 200 LFM (°C/W)	@ 1 W, 400 LFM (°C/W)	power dissipation[1] @ 75°C ΔT, nat conv (W)
HSE-B254-04H	25.4	15.96	16.65	4.93	4.13	4.70
HSE-B381-04H	38.1	12.71	12.33	4.44	2.57	5.90

Note:
1. See performance curves for full thermal resistance details.
2. Custom cut to length options available. Thermal data not available on custom lengths.

PERFORMANCE CURVES

HSE-B254-04H

	Heatsink Temperature Rise Above Ambient (ΔT = Ths - Ta) (°C)		
Power (W)	Natural Conv.	200 LFM	400 LFM
0	0	0	0
1	16.65	4.93	4.13
2	33.54	11.08	8.61
3	49.96	17.20	13.23
4	65.78	23.50	17.80
5	78.65	29.14	21.94
6	92.33	35.03	26.22
7	105.77	41.10	30.69
8	117.14	46.59	35.07
9	127.85	53.10	39.55
10	137.37	59.79	44.08

Ths: "hot spot" temperature measured on the heatsink
Ta: ambient temperature

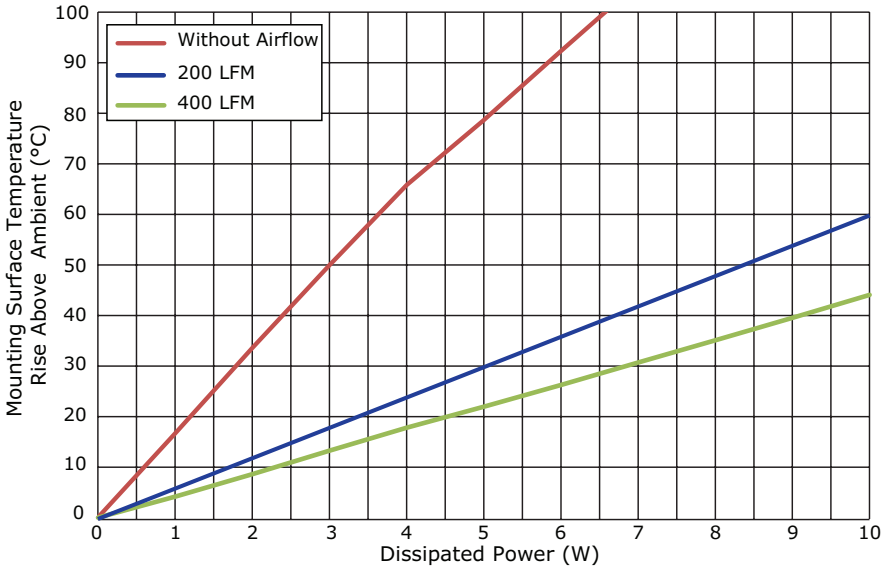

PERFORMANCE CURVES (CONTINUED)

HSE-B381-04H

	Heatsink Temperature Rise Above Ambient (ΔT = Ths - Ta) (°C)		
Power (W)	Natural Conv.	200 LFM	400 LFM
0	0	0	0
1	12.33	4.44	2.57
2	26.70	8.40	6.04
3	41.68	13.14	9.20
4	54.04	17.42	12.44
5	66.70	21.73	15.45
6	77.18	26.26	17.85
7	86.99	30.62	20.63
8	97.85	35.10	24.27
9	108.50	39.48	27.54
10	117.17	44.10	31.21

Ths: "hot spot" temperature measured on the heatsink
Ta: ambient temperature

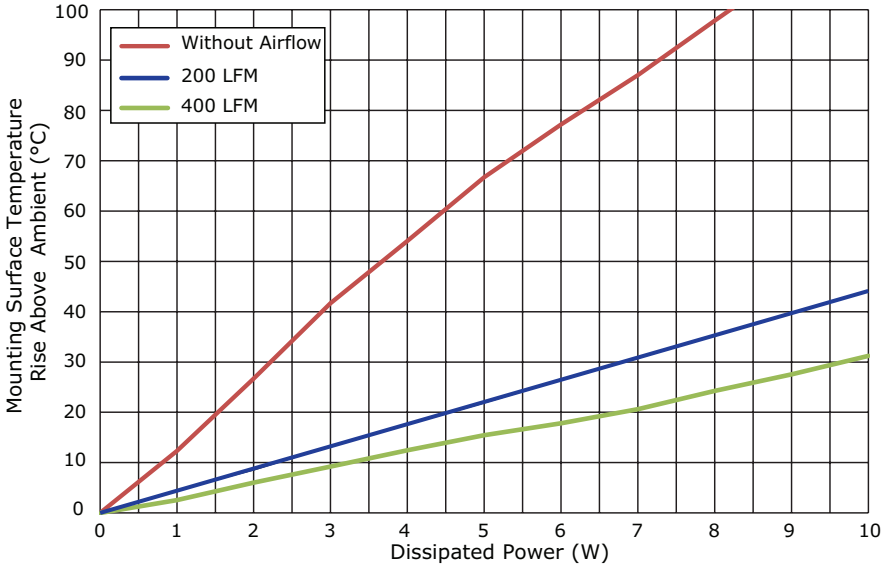

MECHANICAL DRAWING

units: mm
tolerance: ±0.5 mm

MATERIAL	AL 6063-T5
FINISH	black anodized
PIN MATERIAL	steel
PIN PLATING	tin

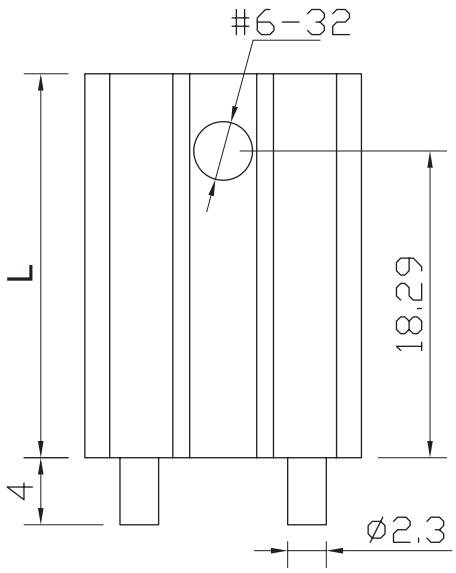

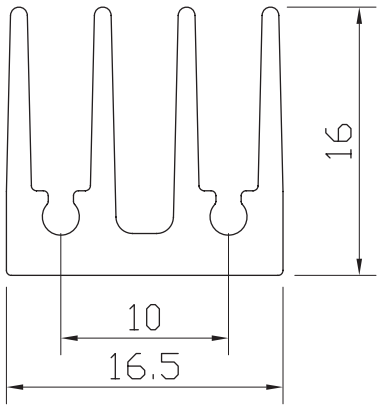

MODEL NO.	LENGTH, L (mm)	WEIGHT (g)
HSE-B254-04H	25.4	9.5
HSE-B381-04H	38.1	15.4

REVISION HISTORY

rev.	description	date
1.0	initial release	04/26/2017
1.01	brand update	02/11/2020
1.02	logo, datasheet style update	08/05/2022

The revision history provided is for informational purposes only and is believed to be accurate.

CUI Devices offers a one (1) year limited warranty. Complete warranty information is listed on our website.

CUI Devices reserves the right to make changes to the product at any time without notice. Information provided by CUI Devices is believed to be accurate and reliable. However, no responsibility is assumed by CUI Devices for its use, nor for any infringements of patents or other rights of third parties which may result from its use.

CUI Devices products are not authorized or warranted for use as critical components in equipment that requires an extremely high level of reliability. A critical component is any component of a life support device or system whose failure to perform can be reasonably expected to cause the failure of the life support device or system, or to affect its safety or effectiveness.