CUI DEVICES



# MODEL: SJ2-35355A-SMT-TR | DESCRIPTION: AUDIO JACK

DISCONTINUED

### FEATURES

- mid mount SMT for low profile designs
- right angle
- reflow solder compatible
- suitable for medical applications

RoHS

## SPECIFICATIONS

| parameter | conditions/description | min | typ | max | units |
|---|---|---|---|---|---|
| rated input voltage | | | 12 | | Vdc |
| rated input current | | | | 1 | A |
| contact resistance[1] | between terminal and mating plug<br>between terminal in a closed circuit | | | 50<br>30 | mΩ<br>mΩ |
| insulation resistance | at 500 Vdc | 100 | | | MΩ |
| voltage withstand | for 1 minute | | | 500 | Vac |
| insertion/withdrawal force | | 0.3 | | 3 | kg |
| operating temperature | | -25 | | 85 | °C |
| life | at a rate of 24 cycles/minute | | 5,000 | | cycles |
| flammability rating | UL94V-0 | | | | |
| RoHS | yes | | | | |

Note:
1. When measured at a current of less than 100 mA/1 kHz
2. All specifications measured at 10~35°C, humidity at 45~85%, under standard atmospheric pressure, unless otherwise noted.

## SOLDERABILITY

| parameter | conditions/description | min | typ | max | units |
|---|---|---|---|---|---|
| reel storage | at relative humidity <80% | | | 40 | °C |
| reflow soldering[3] | see reflow profile | 255 | 260 | 265 | °C |
| drying conditions[4] | parts in reel: bake at 40°C ±5°C for 72 hours<br>parts removed from reel: bake at 40°C ±5°C for 10 hours | | | | |

Note:
3. It is recommended to reflow solder within 72 hours from opening vacuum packaging at a temperature <30°C & relative humidity <60%.
4. When exceeding floor life by >72 hours.

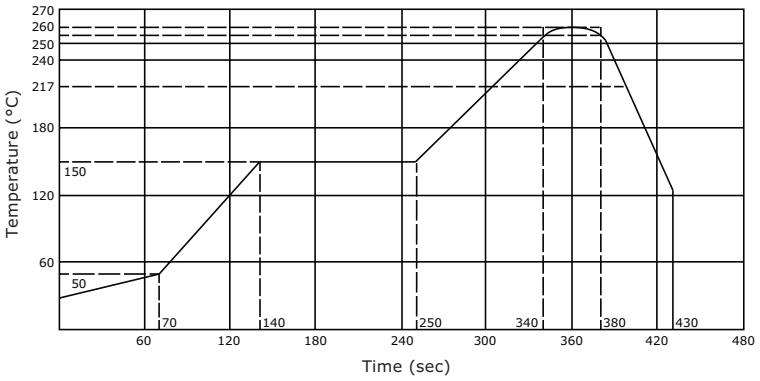

## MECHANICAL DRAWING

units: mm
tolerance:
X.X ±0.2 mm
X.XX ±0.10 mm
X.XXX ±0.050 mm
PCB: ±0.05 mm

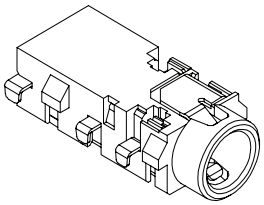

| | MATERIAL | PLATING |
|---|---|---|
| terminal 1 | copper alloy | gold flash |
| terminal 2 | copper alloy | gold flash |
| terminal 3 | copper alloy | gold flash |
| terminal 4 | copper alloy | gold flash |
| terminal 5 | copper alloy | gold flash |
| terminal 6 | copper alloy | gold flash |
| plastic | PA10T | |

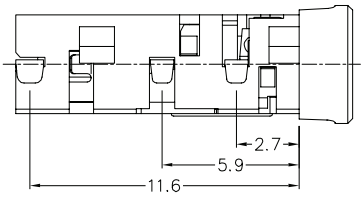


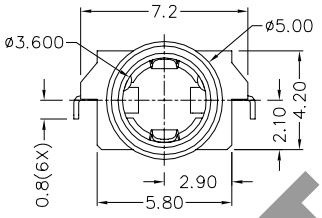


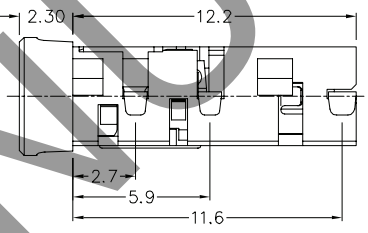


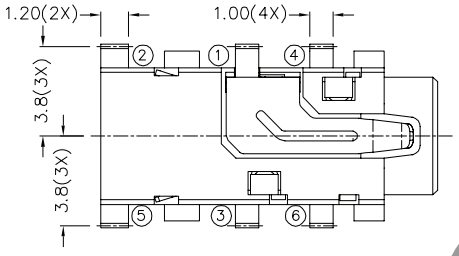


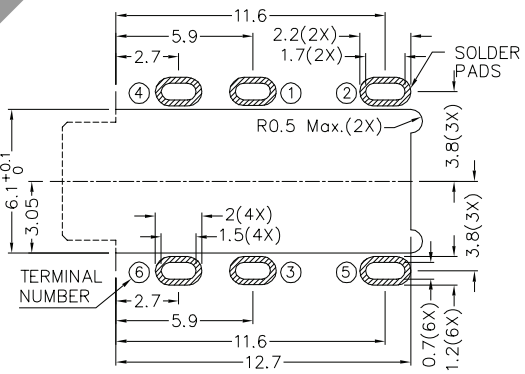


Recommended PCB Layout
Top View

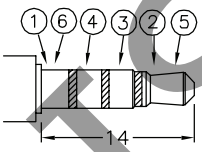


ø3.5 MATING PLUG

| Model No. | SJ2-35355A-SMT-TR |
|---|---|
| Schematic | 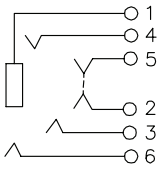 |
| PIN | |
| 1 | sleeve |
| 2 | tip |
| 3 | ring 1 |
| 4 | ring 2 |
| 5 | tip |
| 6 | sleeve |

DISCONTINUED

## PACKAGING

units: mm

Reel Size: Ø381 mm
Reel QTY: 1,400 pcs per reel

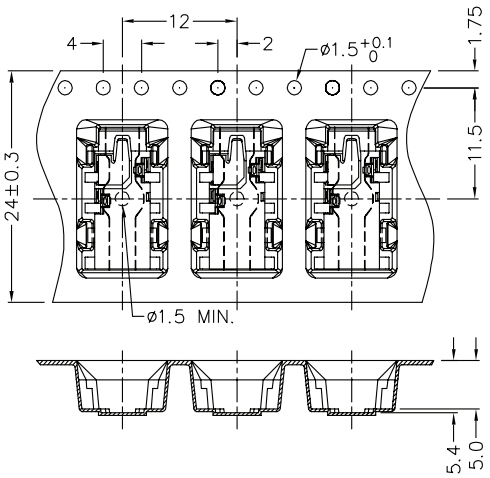


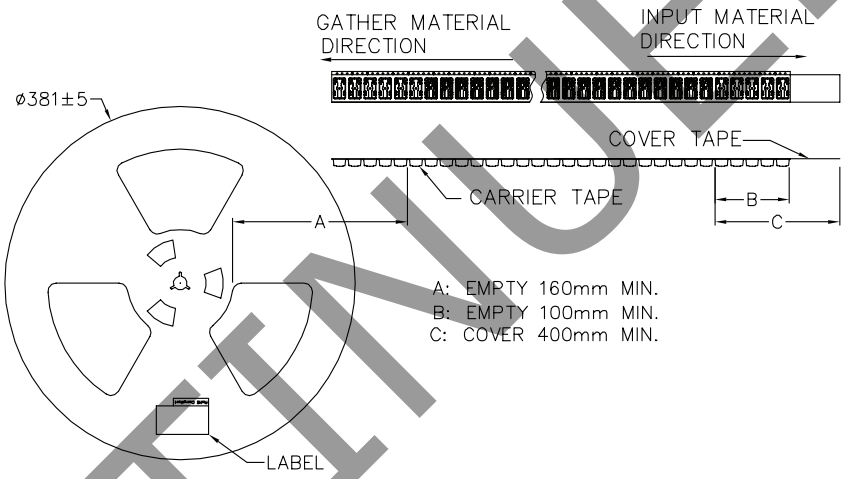


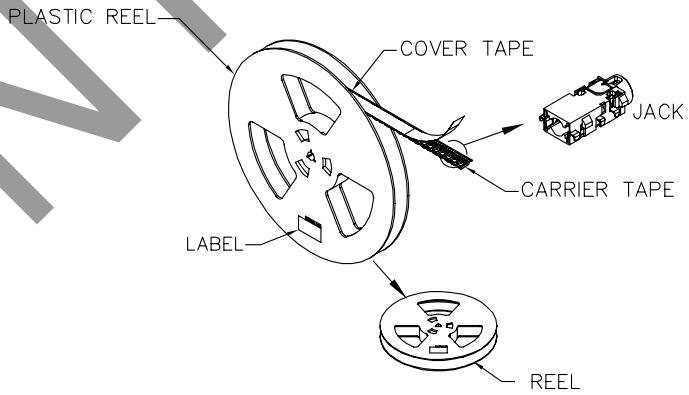


DISCONTINUED

## REVISION HISTORY

| rev. | description | date |
|---|---|---|
| 1.0 | initial release | 12/12/2016 |
| 1.01 | added storage and drying conditions | 06/23/2017 |
| 1.02 | brand update | 10/10/2019 |

The revision history provided is for informational purposes only and is believed to be accurate.

DISCONTINUED

CUI DEVICES

CUI Devices offers a one (1) year limited warranty. Complete warranty information is listed on our website.

CUI Devices reserves the right to make changes to the product at any time without notice. Information provided by CUI Devices is believed to be accurate and reliable. However, no responsibility is assumed by CUI Devices for its use, nor for any infringements of patents or other rights of third parties which may result from its use.

CUI Devices products are not authorized or warranted for use as critical components in equipment that requires an extremely high level of reliability. A critical component is any component of a life support device or system whose failure to perform can be reasonably expected to cause the failure of the life support device or system, or to affect its safety or effectiveness.