SERIES: UJ2-AV-TH | DESCRIPTION: USB RECEPTACLE

FEATURES

- USB type A jack
- USB 2.0
- vertical orientation
- through hole mounting

PART NUMBER KEY

UJ2-AV - X X - TH

- Base Number
- Insulator Color: "blank" = black, W[1] = white
- Contact Plating Thickness (gold): 1 = 3 µ", 2 = 6 µ", 4 = 30 µ"
- Packaging Style: TH = through hole

Notes: 1. White insulator option only available with 30 µ" plating

SPECIFICATIONS

parameter	conditions/description	min	typ	max	units
USB standard	USB 2.0				
rated input voltage				30	Vac
rated input current				1.0	A
contact resistance[1]	between terminals and mating plug			30	mΩ
insulation resistance		1000			MΩ
voltage withstand	for 1 minute			500	Vac
insertion force				35	N
withdrawal force		10			N
operating temperature		-20		85	°C
life			1,500		cycles
flammability rating	UL94V-0				
RoHS	yes				

Note: 1. When measured at 20 mV / 100 mA.
2. All specifications measured at 15~35°C, humidity at 25~85%, under atmospheric pressure of 86~106 kPa, unless otherwise noted.

SOLDERABILITY

parameter	conditions/description	min	typ	max	units
wave soldering	dipped in solder pot for 5 ±0.5 seconds		240		°C

MECHANICAL DRAWING

units: mm
tolerance:
X.X ±0.38 mm
X.XX ±0.25 mm

	MATERIAL	PLATING
contact terminals	phosphor bronze	contact: gold over nickel solder: tin over nickel
shield	steel	nickel
insulator	PBT	

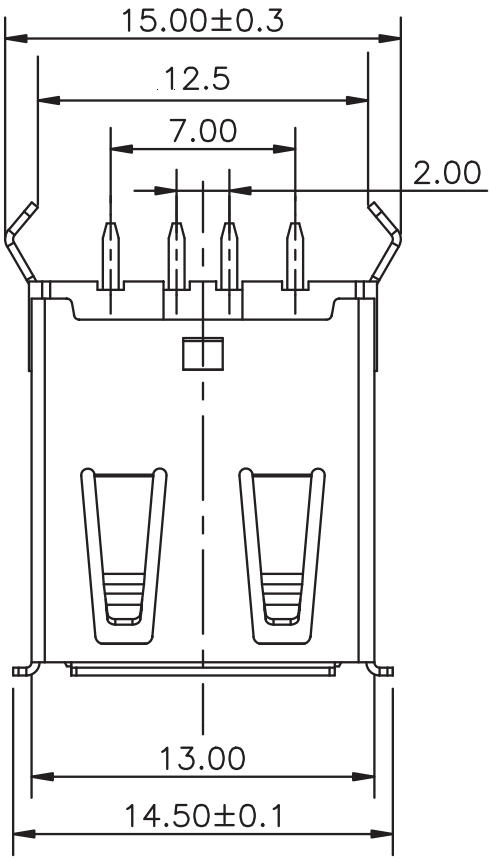

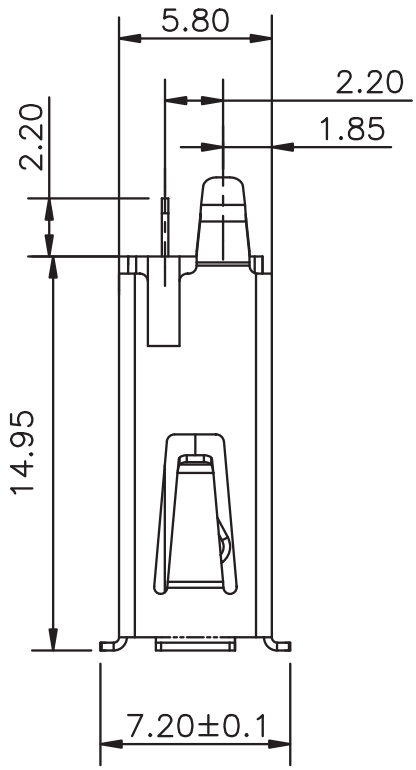

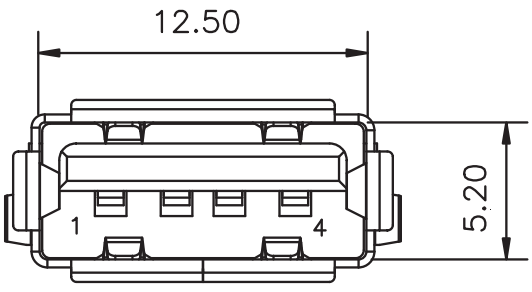

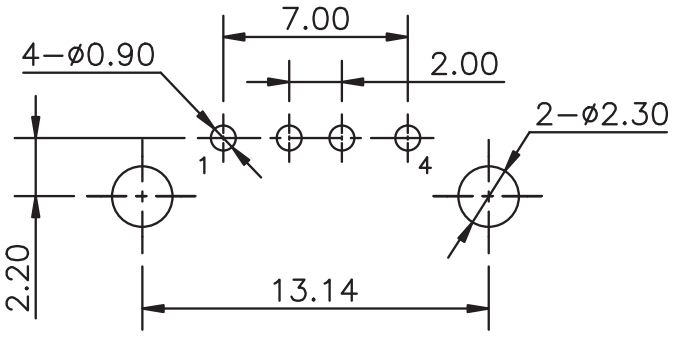

Recommended PCB Layout
Top View

REVISION HISTORY

rev.	description	date
1.0	initial release	08/05/2016
1.01	brand update	02/05/2020
1.02	added USB standard	04/20/2022
1.03	logo, datasheet style update	08/05/2022

The revision history provided is for informational purposes only and is believed to be accurate.

CUI Devices offers a one (1) year limited warranty. Complete warranty information is listed on our website.

CUI Devices reserves the right to make changes to the product at any time without notice. Information provided by CUI Devices is believed to be accurate and reliable. However, no responsibility is assumed by CUI Devices for its use, nor for any infringements of patents or other rights of third parties which may result from its use.

CUI Devices products are not authorized or warranted for use as critical components in equipment that requires an extremely high level of reliability. A critical component is any component of a life support device or system whose failure to perform can be reasonably expected to cause the failure of the life support device or system, or to affect its safety or effectiveness.

cuidevices.com