CUI INC
a bel group

SERIES: V78W-500 | DESCRIPTION: NON-ISOLATED SWITCHING REGULATOR

DISCONTINUED

FEATURES

- up to 500 mA current output
- extremly high efficiency up to 95%
- no heatsink required
- pin comparable to LM78 linear regulators
- available in straight and right angle SIP packages
- up to 8:1 ultra wide input
- low ripple and noise
- short circuit protections
- wide temperature (-40°C ~ 85°C)

RoHS

MODEL

MODEL	input voltage range (Vdc)	output voltage (Vdc)	output current min (mA)	output current max (mA)	output power max (W)	ripple and noise[1] max (mVp-p)	efficiency level[2] typ (%)
V7803W-500[5]	9 ~ 72	3.3	10	500	1.65	60	82
V7805W-500	9 ~ 72	5	10	500	2.5	60	87
V7806W-500[4,5]	9 ~ 72	6.5	10	500	3.25	60	91
V7809W-500[4,5]	14 ~ 72	9	10	500	4.5	60	92
V7812W-500[4]	17 ~ 72	12	10	500	6	60	93
V7815W-500	20 ~ 72	15	10	500	7.5	60	94
V7824W-500[3,4]	36 ~ 72	24	6	300	7.2	60	95

Notes:
1. 20MHz bandwidth, from 10% to 100% load
2. Measured at Vin min and 100% load
3. V7824W-500 output current is 300 mA (max)
4. Standard option discontinued.
5. Bent pin option discontinued.

PART NUMBER KEY

V78 XX W - XXX X

- V78 — Base Number
- XX — Output Voltage
- XXX — Output Current
- X — blank = standard; R = Right Angle

DISCONTINUED

INPUT

parameter	conditions/description	min	typ	max	units
operating input voltage	3, 5, 6.5 V models	9	48	72	Vdc
	9 V model	14	48	72	Vdc
	12 V model	17	48	72	Vdc
	15 V model	20	48	72	Vdc
	24 V model	36	48	72	Vdc

OUTPUT

parameter	conditions/description	min	typ	max	units
line regulation	measured from low line to high line		±0.4	±1.0	%
load regulation	measured from 10% to full load		±0.3	±0.6	%
voltage accuracy	at 100% load		±2	±3	%
switching frequency	100% load	120		800	kHz
temperature coefficient	-40°C ~ +85°C ambient			±0.015	%/°C
quiescent current	Vin = nominal, min. load		1	5	mA
tendencies load	at 10% to 100% load			±100	mV
			1.0	1.5	ms
max capacitance load				100	µF

PROTECTIONS

parameter	conditions/description	min	typ	max	units
short circuit protection	continuous, automatic recovery				
short circuit input power	Vin = nominal		0.72	1.2	W
thermal shutdown			160		°C
current limit	Vin = nominal		700	1200	mA

SAFETY AND COMPLIANCE

parameter	conditions/description	min	typ	max	units
thermal resistance				60	°C/W
EMI/EMC	EN55022, class B (refer to page 4), IEC/EN 61000-4-2 level 4				
RoHS compliant	yes				
MTBF	25°C (MIL-HDBK-217K)	3,500,000			hours
	71°C (MIL-HDBK-217K)	1,500,000			hours

ENVIRONMENTAL

parameter	conditions/description	min	typ	max	units
case operating temperature			65	100	°C
operating temperature	power derating above 71°C	-40		85	°C
storage temperature		-55		125	°C
storage humidity	non-condensing			95	%

MECHANICAL

parameter	conditions/description	min	typ	max	units
dimensions	11.5 x 9.0 x 17.5 mm (0.45 x 0.35 x 0.69 inch)				
case material	Plastic (UL94-V0)				
weight			4		g

MECHANICAL DRAWING

Units: mm [in]
All pins on a 2.54mm pitch
pin tolerance: ±0.10mm[±0.004in]
general tolerance: ±0.25mm[±0.010in]
general tolerance (right angle): ±0.50mm[±0.020in]

V78W-500

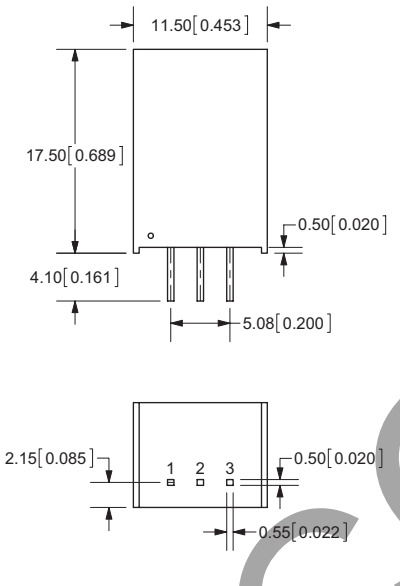

V78W-500R

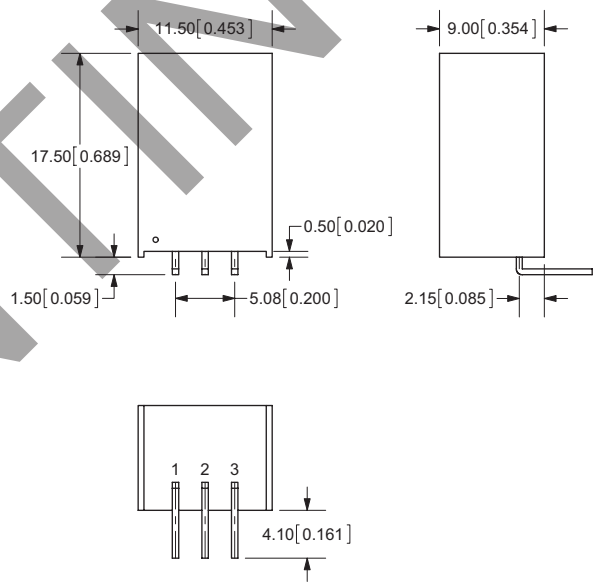

RECOMMENDED FOOTPRINT

V78W-500

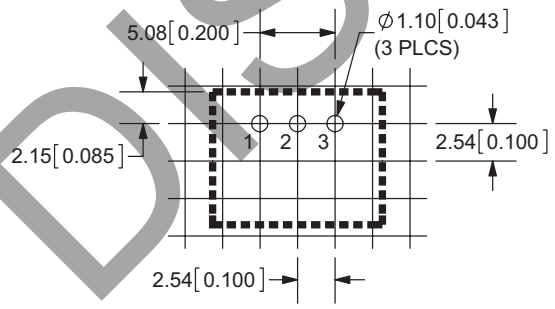

V78W-500R

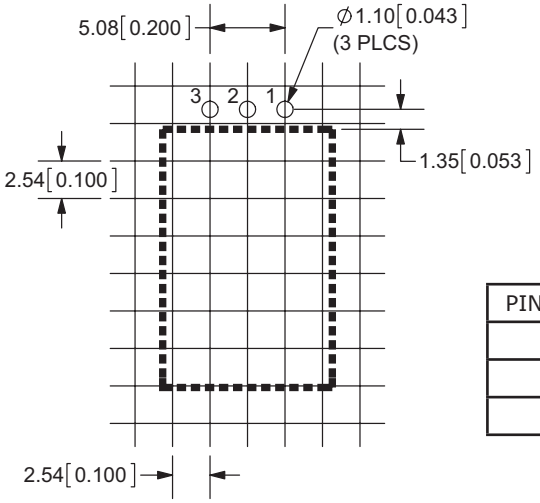

PIN CONNECTIONS	
1	+Vin
2	GND
3	+Vout

DISCONTINUED

TYPICAL APPLICATION CIRCUIT

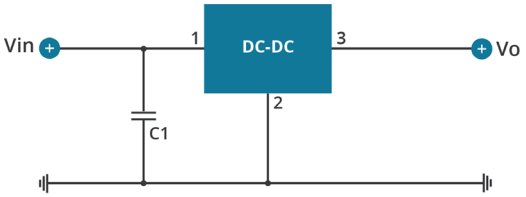

1. The regulator proposed to establish the input voltage by soft-start, no plug and play, if the input voltage changes from low voltage to high voltage abruptly, the regulator might be damaged.

2. If the applications is high-voltage input, the regulator must add an external capacitor C1(≤47μF/100V) to prevent voltage spikes caused by damage to the module.

3. No parallel connection.

APPLICATION EXAMPLE

High voltage input, multiple outputs, with greater load

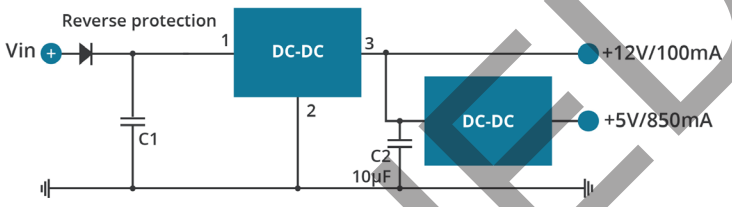

1. The input current amount of the back-grade regulator and the pre-class load should be less than or equal the max load current of the pre-class regulator.

2. If further filtering is required, please add components as per the above circuit (We recommend not to add components), if request, please make sure the capacitors C1 ≤47μF, C2≤10μF more close to the back-grade regulator.

MODULES PROTECT RECOMMENDED CIRCUIT

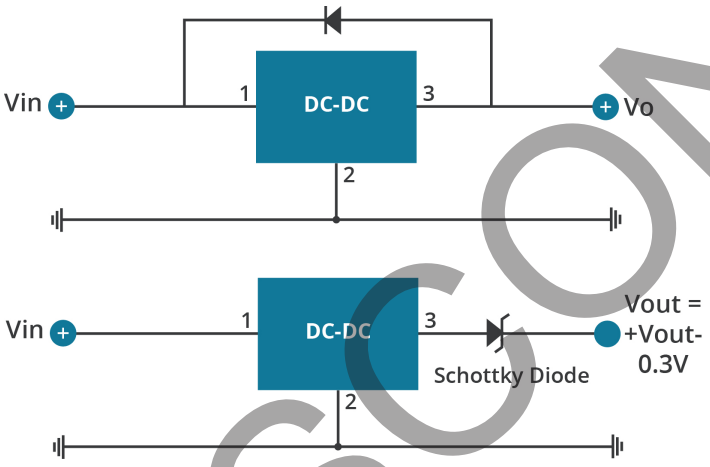

DERATING CURVE

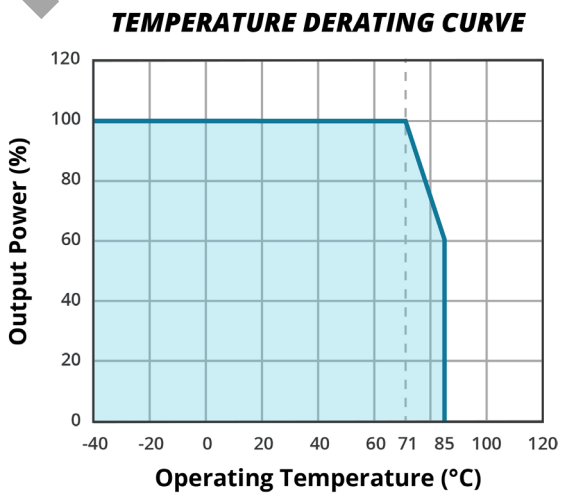

EMC RECOMMENDED CIRCUIT

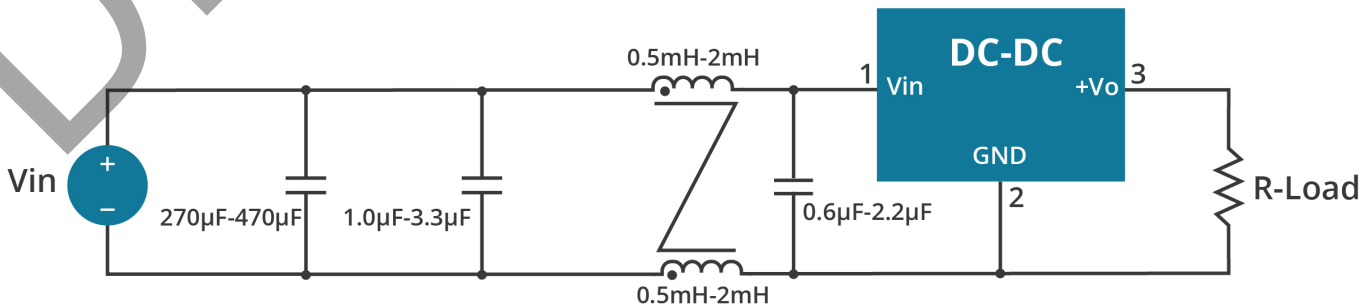

DISCONTINUED

REVISION HISTORY

rev.	description	date
1.0	initial release	09/28/2011
1.01	V-Infinity branding removed	09/06/2012
1.02	updated datasheet	04/21/2015
1.03	company logo updated	04/14/2021
1.04	derating curve and circuit figures updated	09/21/2021
1.05	discontinued model V7803W-500R, V7806W-500, V7806W-500R, V7809W-500, V7809W-500R, V7812W-500 & V7824W-500	01/15/2024

The revision history provided is for informational purposes only and is believed to be accurate.

DISCONTINUED

CUI INC
a bel group

Headquarters
20050 SW 112th Ave.
Tualatin, OR 97062
800.275.4899

Fax 503.612.2383
cui.com
techsupport@cui.com

CUI offers a two (2) year limited warranty. Complete warranty information is listed on our website.

CUI reserves the right to make changes to the product at any time without notice. Information provided by CUI is believed to be accurate and reliable. However, no responsibility is assumed by CUI for its use, nor for any infringements of patents or other rights of third parties which may result from its use.

CUI products are not authorized or warranted for use as critical components in equipment that requires an extremely high level of reliability. A critical component is any component of a life support device or system whose failure to perform can be reasonably expected to cause the failure of the life support device or system, or to affect its safety or effectiveness.