CUDEVICES

MODEL: UP31-CV-G-CM | **DESCRIPTION:** USB PLUG

FEATURES

- USB Type C plug
- USB 3.2 Gen 2
- 10 Gbit/s data transfer speed
- reflow solder compatible

RoHS

SPECIFICATIONS

parameter	conditions/description	min	typ	max	units
USB standard	USB 3.2 Gen 2				
rated input voltage				20	Vdc
rated input current	as per EIA-364-70, Method B power pins collectively (A4, A9, B4, B9) GND pins collectively (A1, A12, B1, B12) VCONN pins individually (A5, B5) all other signal pins individually			 5.0 6.25 1.25 0.25	 A A A A
contact resistance[1]	between terminals and mating plug			40	mΩ
insulation resistance	at 100 Vdc for 1 minute between adjacent contacts	100			MΩ
voltage withstand	at 60 Hz for 1 minute between adjacent contacts			100	Vac
insertion force	at a rate of 12.5 mm/min	5		20	N
withdrawal force	at a rate of 12.5 mm/min	8		20	N
life	at a rate of 200 max cycles per hour		10,000		cycles
operating temperature		-30		85	°C
storage temperature		-40		85	°C
flammability rating	UL94V-0				
RoHS	yes				

Note: 1. When measured at 20 mV max / 100 mA.

SOLDERABILITY

parameter	conditions/description	min	typ	max	units
reel storage	at relative humidity <60%			30	°C
reflow soldering[2]	see reflow profile	255	260	265	°C

Note: 2. It is recommended to reflow solder within 168 hours from opening vacuum packaging at a temperature <30°C & relative humidity <60%.

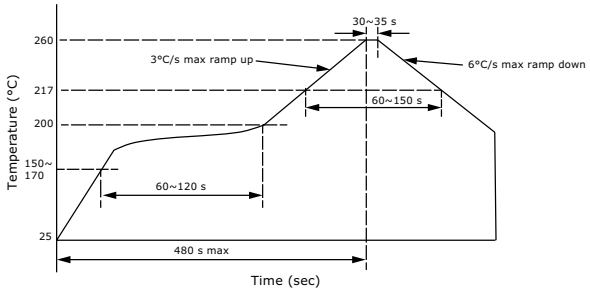

MECHANICAL DRAWING

units: mm
tolerance:
X.X ±0.2 mm
X.XX ±0.15 mm

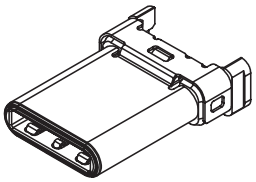

	MATERIAL	PLATING
contact terminals	copper alloy	contact: 2 µ" gold
ground spring	stainless steel	
shell	stainless steel	nickel
latch	stainless steel	nickel
insulator	silicone adhesive	
internal body	LCP	
housing	PA9T	

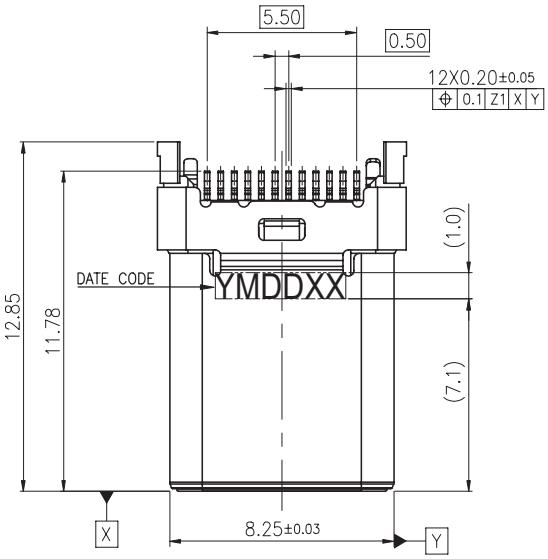

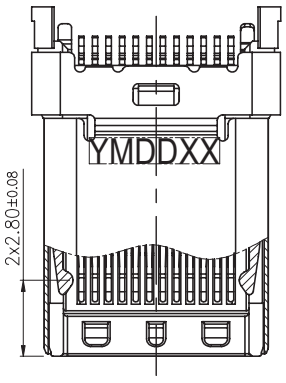

SECTION:A–A

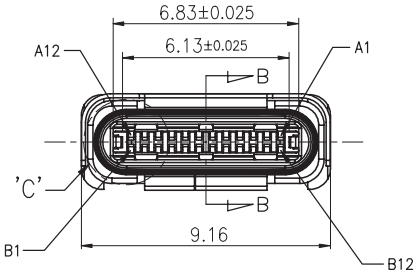

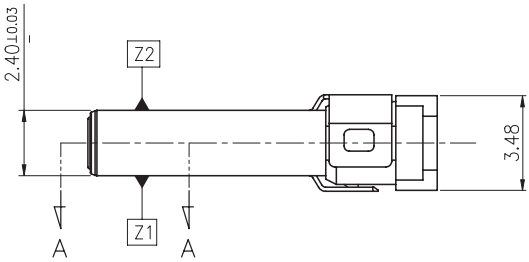

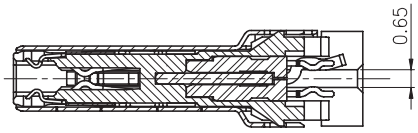

SECTION:B–B

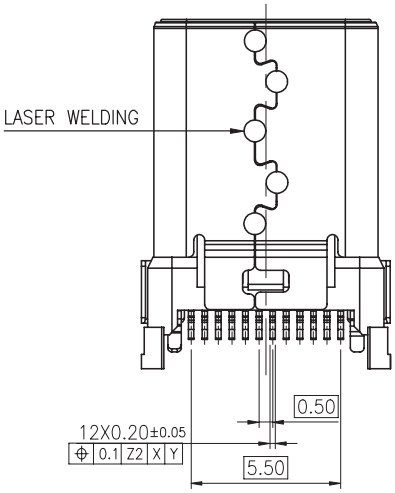

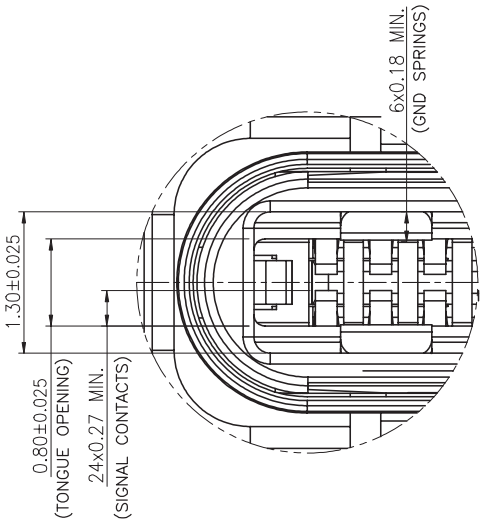

MECHANICAL DRAWING (CONTINUED)

units: mm
PCB tolerance: ±0.05 mm

PIN CONNECTIONS			
PIN	SIGNAL NAME	PIN	SIGNAL NAME
A1	GND	B12	GND
A2	SSTXp1	B11	SSRXp1
A3	SSTXn1	B10	SSRXn1
A4	V_{BUS}	B9	V_{BUS}
A5	CC1	B8	SBU2
A6	Dp1	B7	Dn2
A7	Dn1	B6	Dp2
A8	SBU1	B5	CC2
A9	V_{BUS}	B4	V_{BUS}
A10	SSRXn2	B3	SSTXn2
A11	SSRXp2	B2	SSTXp2
A12	GND	B1	GND
SHELL		SHELL	

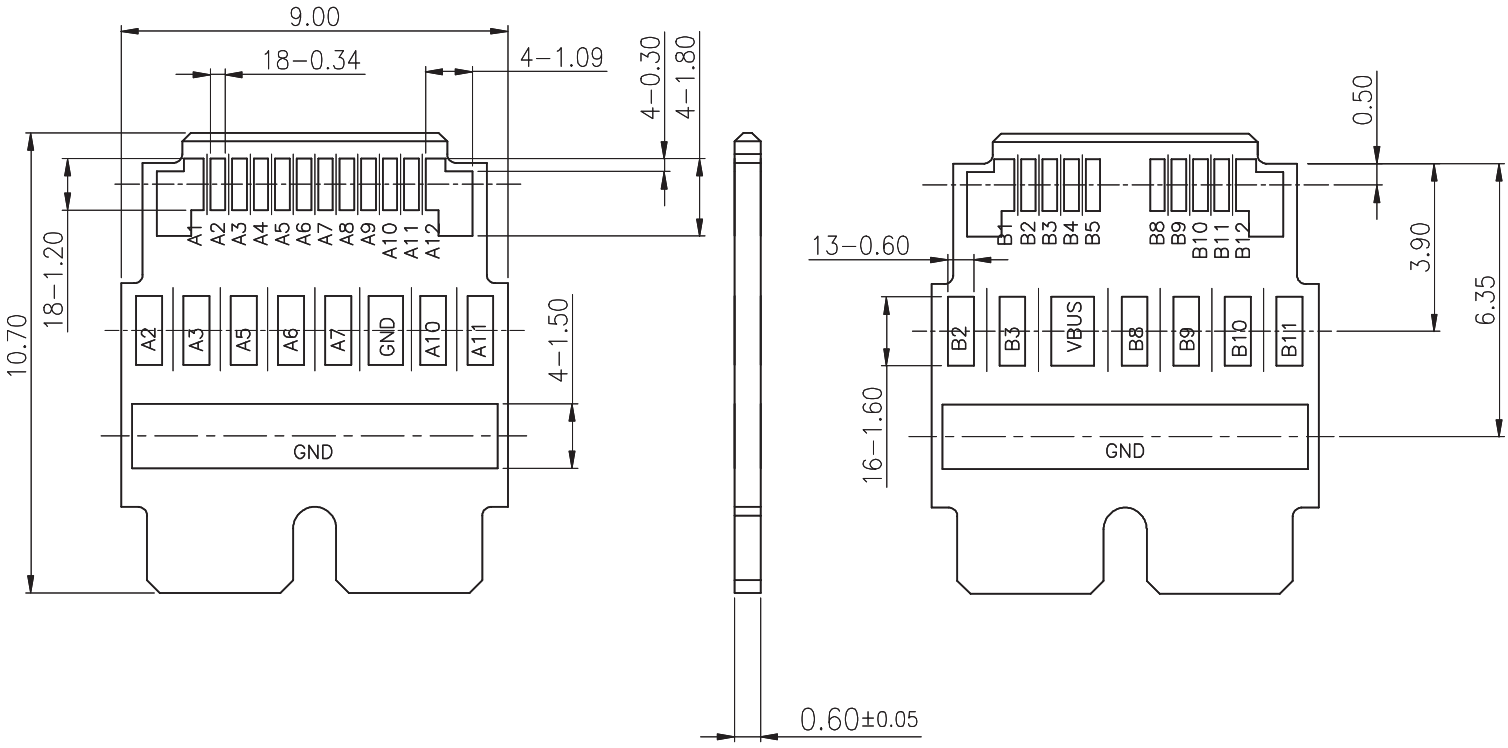

Recommended PCB Layout
Top View

REVISION HISTORY

rev.	description	date
1.0	initial release	12/19/2017
1.01	updated datasheet	01/30/2018
1.02	brand update	01/28/2020
1.03	updated USB standard	04/19/2022
1.04	logo, datasheet style update	08/05/2022

The revision history provided is for informational purposes only and is believed to be accurate.

CUI Devices offers a one (1) year limited warranty. Complete warranty information is listed on our website.

CUI Devices reserves the right to make changes to the product at any time without notice. Information provided by CUI Devices is believed to be accurate and reliable. However, no responsibility is assumed by CUI Devices for its use, nor for any infringements of patents or other rights of third parties which may result from its use.

CUI Devices products are not authorized or warranted for use as critical components in equipment that requires an extremely high level of reliability. A critical component is any component of a life support device or system whose failure to perform can be reasonably expected to cause the failure of the life support device or system, or to affect its safety or effectiveness.