CUDEVICES

MODEL: AC-C7 EU | **DESCRIPTION:** AC CORD, EUROPE

RoHS

MECHANICAL DRAWING

units: mm

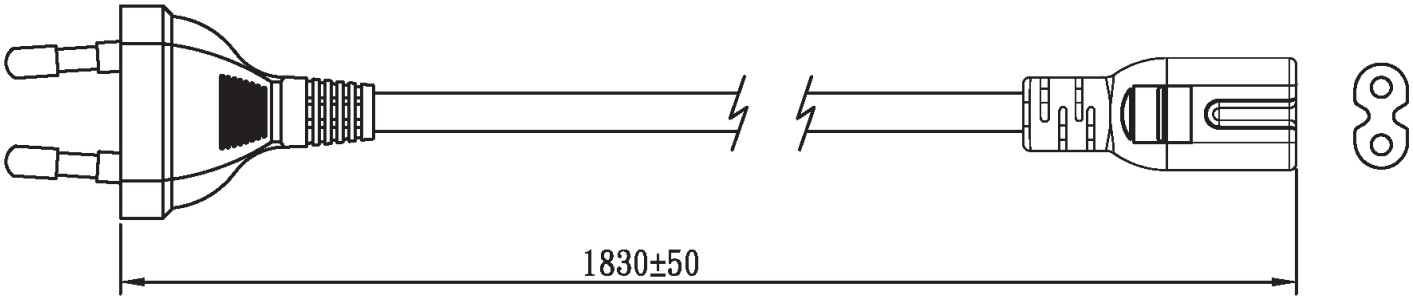

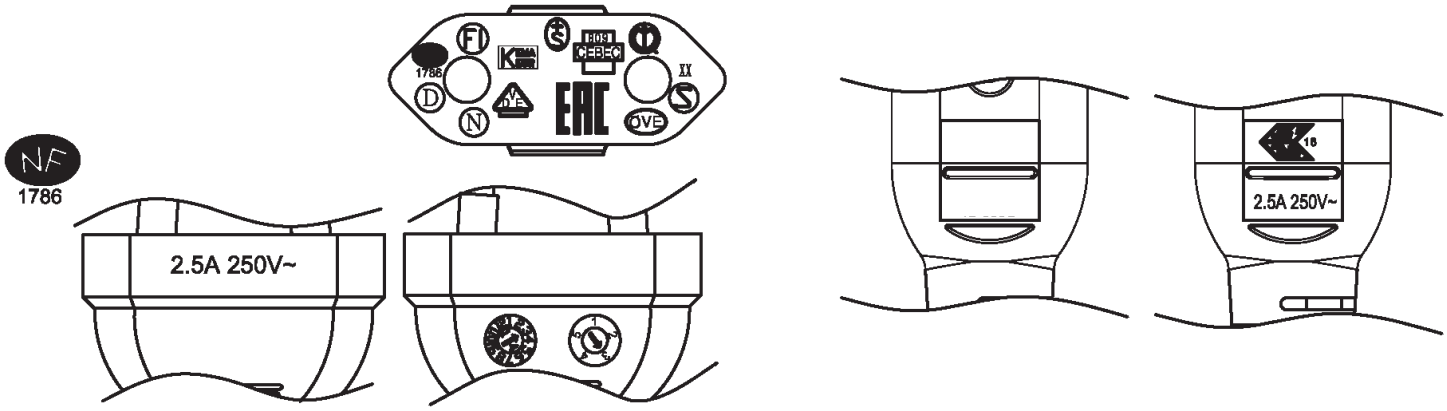

WIRING COLOR:

L: Brown

N: Blue

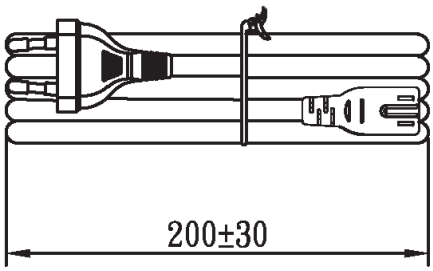

REVISION HISTORY

rev.	description	date
1.0	initial release	08/16/2011
1.01	plug and connector update, safety marking placement update	09/17/2019
1.02	brand update	02/14/2020
1.03	updated datasheet	05/04/2020
1.04	logo, datasheet style update	10/25/2022

The revision history provided is for informational purposes only and is believed to be accurate.

CUI Devices offers a one (1) year limited warranty. Complete warranty information is listed on our website.

CUI Devices reserves the right to make changes to the product at any time without notice. Information provided by CUI Devices is believed to be accurate and reliable. However, no responsibility is assumed by CUI Devices for its use, nor for any infringements of patents or other rights of third parties which may result from its use.

CUI Devices products are not authorized or warranted for use as critical components in equipment that requires an extremely high level of reliability. A critical component is any component of a life support device or system whose failure to perform can be reasonably expected to cause the failure of the life support device or system, or to affect its safety or effectiveness.