CUDEVICES

MODEL: CEP-1130 | **DESCRIPTION:** PIEZO BUZZER TRANSDUCER

FEATURES

- piezo transducer with pin mount
- 90 dB SPL
- 3,000 Hz rated frequency

RoHS

SPECIFICATIONS

parameter	conditions/description	min	typ	max	units
operating voltage				30	Vp-p
current consumption	at 10 Vp-p, 3,000 Hz square wave			10	mA
rated frequency			3,000		Hz
sound pressure level	at 10 cm, 10 Vp-p, 3,000 Hz square wave	90			dB
electrostatic capacity	at 1 kHz/1 V	12,600	18,000	23,400	pF
dimensions	Ø30.0 x 7.5				mm
weight				4.4	g
material	ABS UL94 1/16" HB High Heat (black)				
terminal	pin type (Sn plating)				
operating temperature		-30		80	°C
storage temperature		-40		80	°C
RoHS	yes				

Notes: 1. All specifications measured at 5~35°C, humidity at 45~85%, under 86~106kPa pressure, unless otherwise noted.

SOLDERABILITY

parameter	conditions/description	min	typ	max	units
hand soldering[2]	for maximum 3 seconds	340	350	360	°C

Notes: 2. Not recommended for wave soldering

MECHANICAL DRAWING

units: mm
tolerance: ±0.5 mm

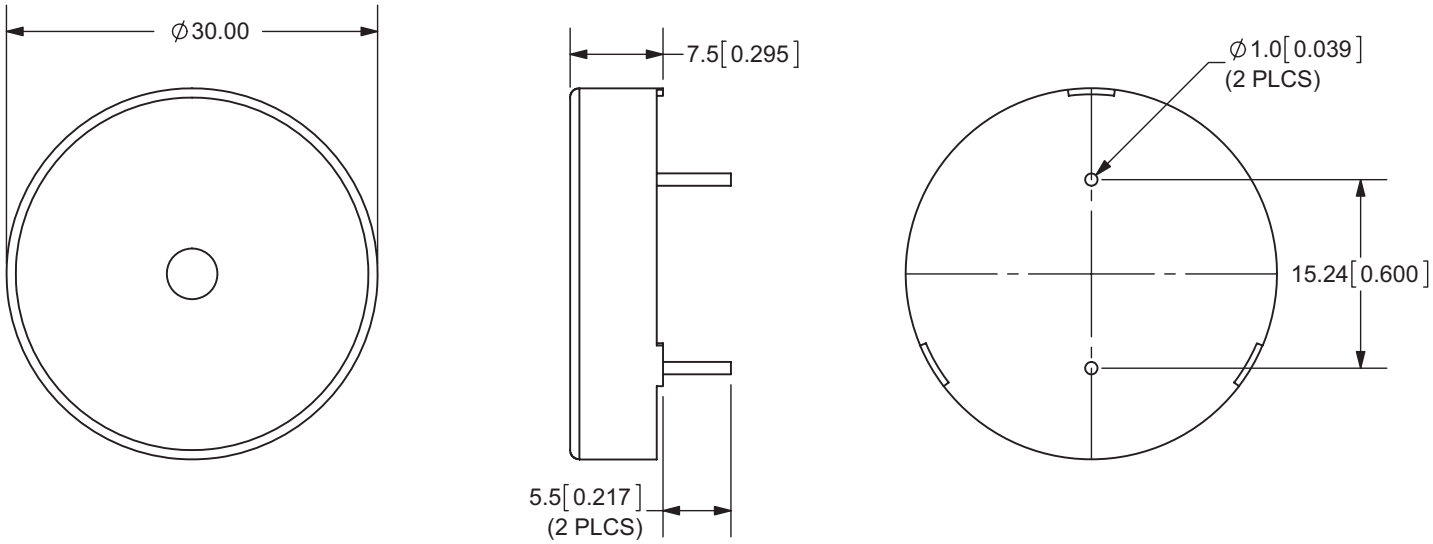

FREQUENCY RESPONSE CURVE

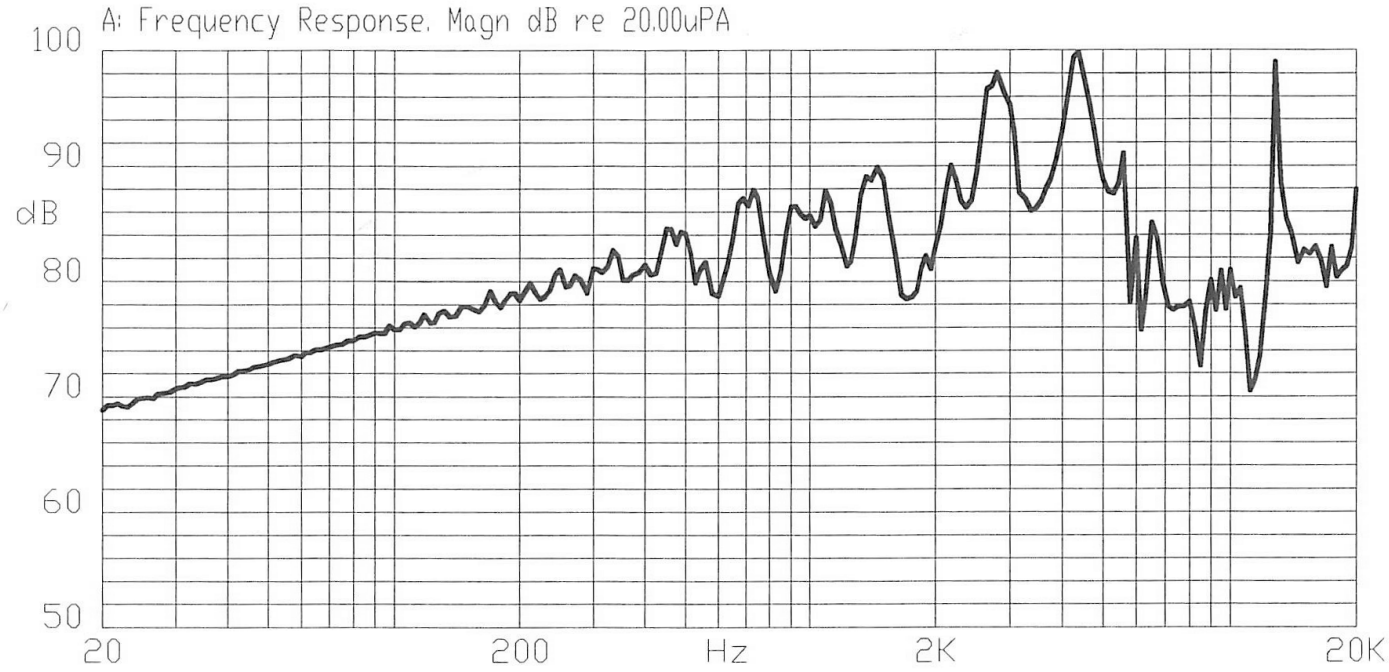

REVISION HISTORY

rev.	description	date
1.0	initial release	07/31/2006
1.01	brand update	03/12/2020
1.02	logo, datasheet style update	08/05/2022

The revision history provided is for informational purposes only and is believed to be accurate.

CUI Devices offers a one (1) year limited warranty. Complete warranty information is listed on our website.

CUI Devices reserves the right to make changes to the product at any time without notice. Information provided by CUI Devices is believed to be accurate and reliable. However, no responsibility is assumed by CUI Devices for its use, nor for any infringements of patents or other rights of third parties which may result from its use.

CUI Devices products are not authorized or warranted for use as critical components in equipment that requires an extremely high level of reliability. A critical component is any component of a life support device or system whose failure to perform can be reasonably expected to cause the failure of the life support device or system, or to affect its safety or effectiveness.