CUI DEVICES

SERIES: CFM-80 | DESCRIPTION: DC AXIAL FAN

FEATURES

- 80 x 80 mm frame
- high fan speed for greater air flow
- dual ball bearing construction
- auto restart protection standard on all models

MODEL	input voltage		input current		input power	rated speed	air flow[1]	static pressure[2]	noise
	rated (Vdc)	range (Vdc)	typ (A)	max (A)	max (W)	typ (RPM)	(CFM)	(inch H_2O)	max (dBA)
CFM-8010-13*	12	6~13.8	0.16	0.24	2.88	3,300	33.61	0.11	38.2
CFM-8015-13*	12	6~13.8	0.18	0.24	2.88	3,500	43.96	0.16	39.8
CFM-8025-13*	12	6~13.8	0.33	0.43	5.16	5,100	69.20	0.42	47.0
CFM-8025-23*	24	16~27.6	0.16	0.25	4.8	5,100	69.20	0.42	47.0

Notes: 1. At 0 inch H_20 static pressure.
2. At 0 CFM airflow.
*. Discontinued all models of the CFM-8010-13, CFM-8015-13, & CFM-8025-13; and individual models CFM-8025-23-11, CFM-8025-23-20, and CFM-8025-23-22.

PART NUMBER KEY

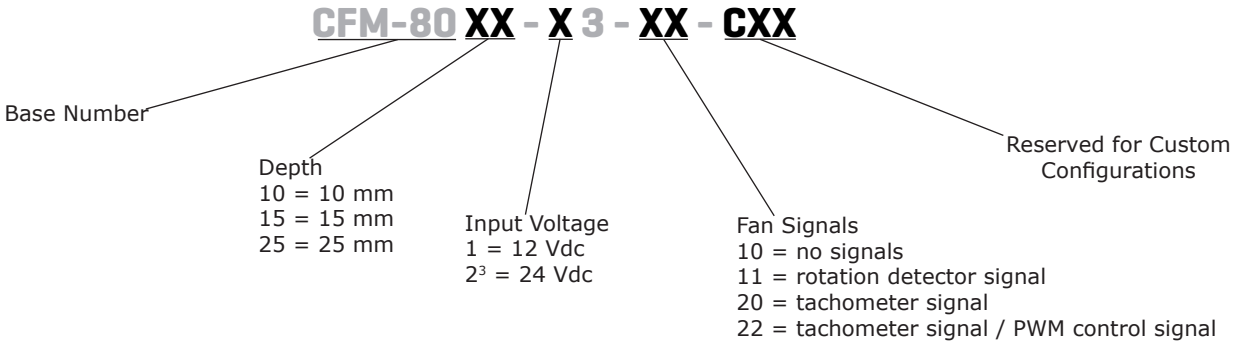

Notes: 3. 24 Vdc input voltage option only available with 25 mm depth

INPUT

parameter	conditions/description	min	typ	max	units
operating input voltage	12 Vdc input models 24 Vdc input models	6 16	12 24	13.8 27.6	Vdc Vdc
current	CFM-8010 models CFM-8015 models CFM-8025 models CFM-8025 models		0.16 0.18 0.33 0.16	0.24 0.24 0.43 0.25	A A A A
power	CFM-8010 models CFM-8015 models CFM-8025 models CFM-8025 models		1.92 2.16 3.96 3.84	2.88 2.88 5.16 4.8	W W W W
starting voltage	at 25°C 12 Vdc input models 24 Vdc input models		 6 16		 Vdc Vdc

PERFORMANCE

parameter	conditions/description	min	typ	max	units
rated speed	at 25°C, after 10 minutes CFM-8010 models CFM-8015 models CFM-8025 models	 2,970 3,150 4,590	 3,300 3,500 5,100	 3,630 3,850 5,610	 RPM RPM RPM
air flow	at 0 inch H_2O, see performance curves CFM-8010 models CFM-8015 models CFM-8025 models		 33.61 43.96 69.20		 CFM CFM CFM
static pressure	at 0 CFM, see performance curves CFM-8010 models CFM-8015 models CFM-8025 models		 0.11 0.16 0.42		 inch H_2O inch H_2O inch H_2O
noise	at 1 m CFM-8010 models CFM-8015 models CFM-8025 models		 36.0 38.0 45.5	 38.2 39.8 47.0	 dBA dBA dBA

PROTECTIONS / SIGNALS[1]

parameter	conditions/description	min	typ	max	units
auto restart protection	available on all models				
rotation detector	available on "11" models				
tachometer signal	available on "20" and "22" models				
PWM control signal	available on "22" models				

Notes: 1. See application notes for details.

SAFETY & COMPLIANCE

parameter	conditions/description	min	typ	max	units
insulation resistance of frame	at 500 Vdc between frame and positive terminal	10			MΩ
dielectric strength	at 500 Vac, 60 Hz, 1 minute between frame and positive terminal			5	mA
safety approvals	UL/cUL 507, TUV (EN 62368-1)				
EMI/EMC	EN 55022:2010+AC:2011 Class B, EN 61000-3-2:2014, EN 61000-3-3:2013, EN 55024:2010				
life expectancy	at 45°C, 15~65% RH		70,000		hours
RoHS	yes				

ENVIRONMENTAL

parameter	conditions/description	min	typ	max	units
operating temperature		-10		70	°C
storage temperature		-40		70	°C
operating humidity	non-condensing	5		90	%
storage humidity	non-condensing	5		95	%

PERFORMANCE CURVES

CFM-8010

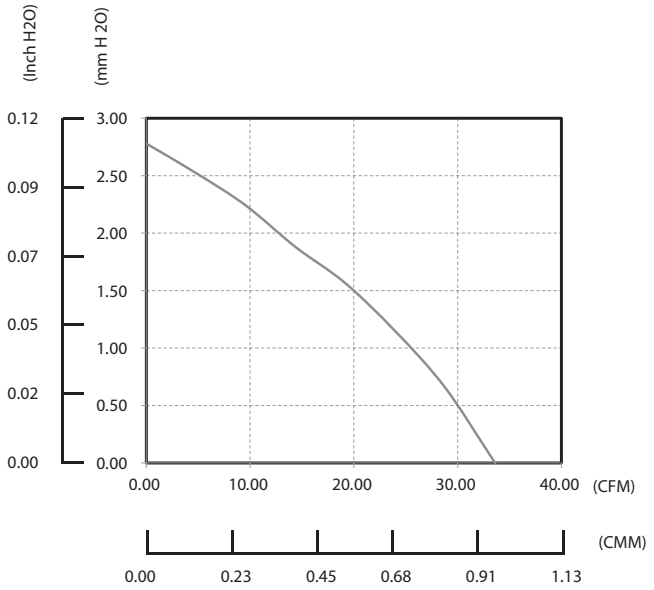

CFM-8015

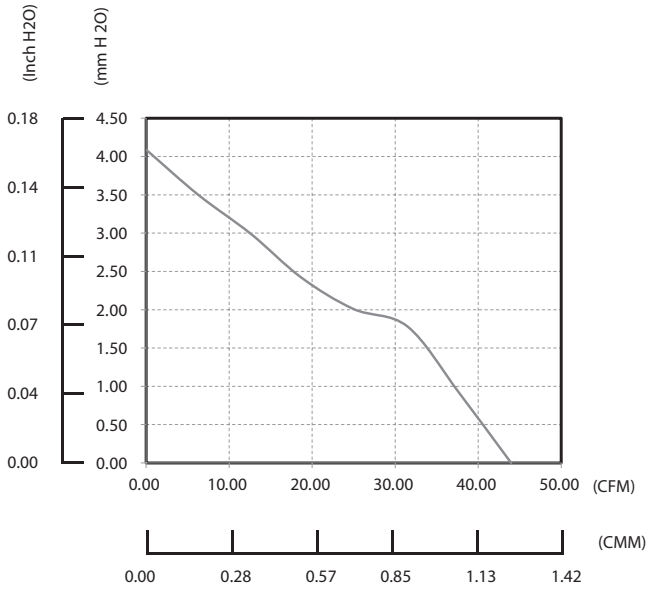

CFM-8025

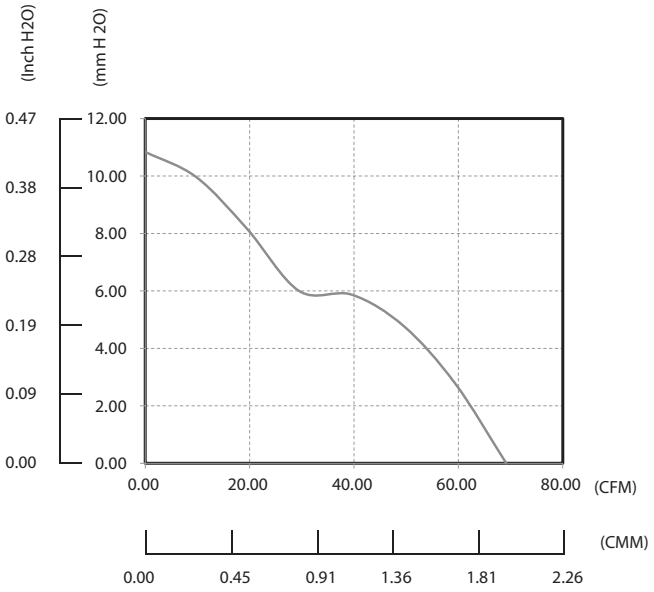

MECHANICAL

parameter	conditions/description	min	typ	max	units
motor	4 pole DC brushless				
bearing system	ball bearing				
direction of rotation	counter-clockwise viewed from front of fan blade				
dimensions	CFM-8010 models: 80 x 80 x 10.6 CFM-8015 models: 80 x 80 x 15.4 CFM-8025 models: 80 x 80 x 25.4				mm mm mm
material	PBT (UL94V-0)				
weight	CFM-8010-13 models CFM-8015-13 models CFM-8025-13 models CFM-8025-23 models		42.6 59.2 87.7 91.6		g g g g

MECHANICAL DRAWING

units: mm [inch]

CFM-8010

wire: UL 1061, 26 AWG

WIRE CONNECTIONS	
Wire Color	Function
Red	+Vin
Black	-Vin
Yellow[1]	FG Signal
White[1]	RD Signal
Blue[1]	PWM

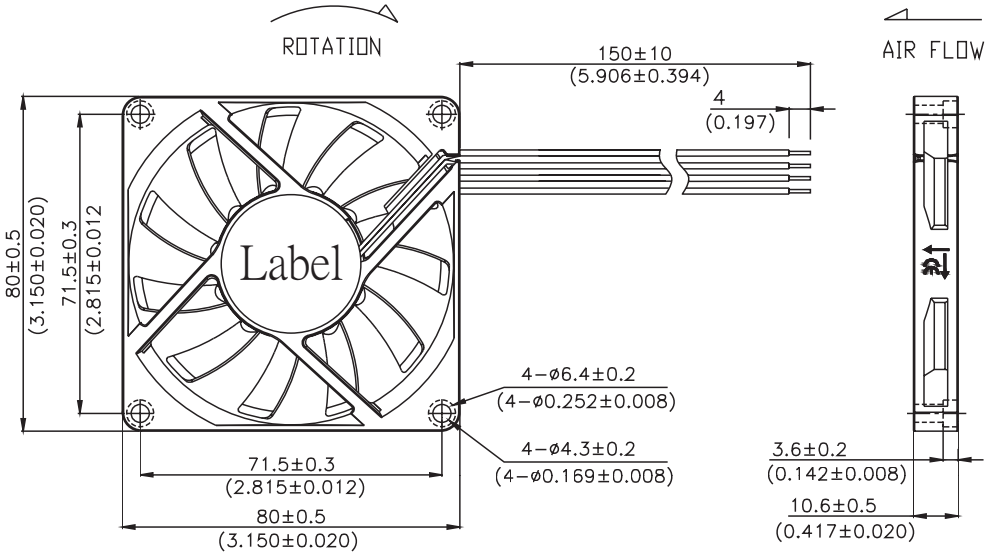

CFM-8015

wire: UL 1061, 26 AWG

WIRE CONNECTIONS	
Wire Color	Function
Red	+Vin
Black	-Vin
Yellow[1]	FG Signal
White[1]	RD Signal
Blue[1]	PWM

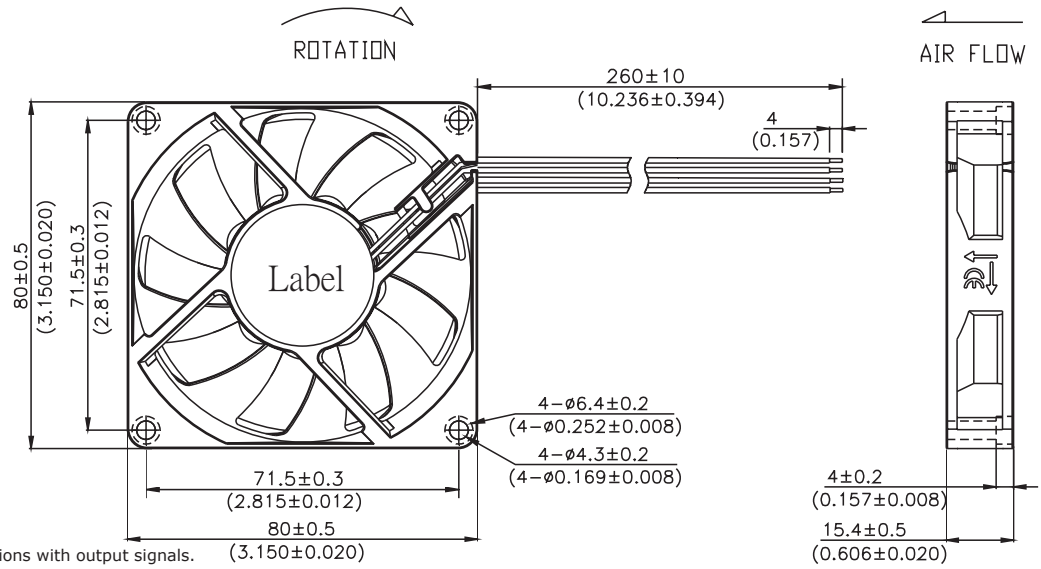

Note: 1. Wires only present on versions with output signals.

MECHANICAL DRAWING (CONTINUED)

units: mm [inch]

CFM-8025

wire: UL 1007, 24 AWG

WIRE CONNECTIONS	
Wire Color	Function
Red	+Vin
Black	-Vin
Yellow[1]	FG Signal
White[1]	RD Signal
Blue[1]	PWM

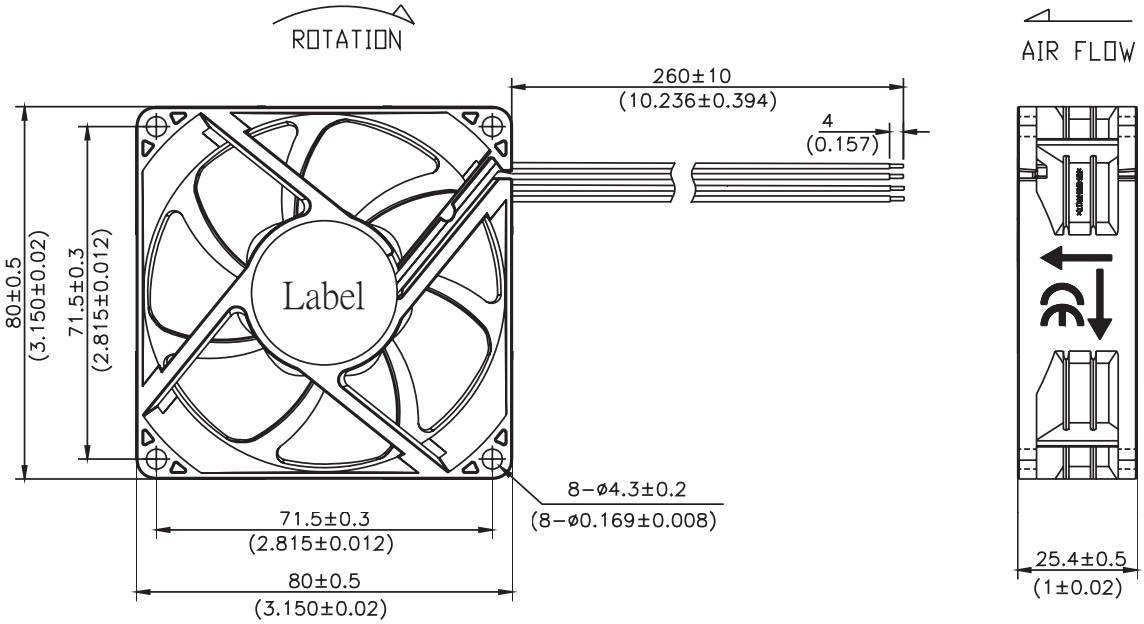

Note: 1. Wires only present on versions with output signals.

APPLICATION NOTES

Auto Restart Protection/Current Limit Protection

When the fan motor is locked, the device will cut off the drive current within two to six seconds and restart automatically after a few seconds. If the lock situation is continued, the device will work on a repeated cycle of cut-off and restart until the lock is released. (See Figure 1 below).

Figure 1 Current Limit Protection

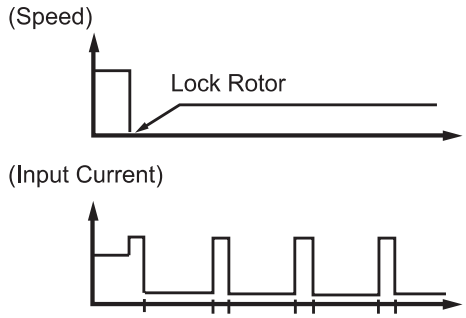

Lock Sensor/Rotation Detector

Lock Sensor is used to detect if the fan motor is operating or stopped. Alarm High: the output will be logical low when fan is operating and be logical high when fan motor is locked. (See Figures 2~3 below).

Figure 2 Alarm High Output Waveform

Figure 3 RD Signal Output Circuit: Open Collector

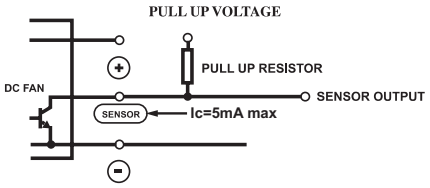

Pulse Sensor/Tachometer Signal/FG

Pulse Sensor is for detecting the rotational speed of the fan motor. At locked rotor condition, the signal stops cycling and the output is fixed at VoH or VoL (See Figures 4~5 below).

Figure 4 Output Waveform

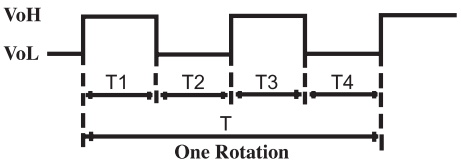

$T_{1\text{-}4} \fallingdotseq (1/4)T$

N=Fan Rotational Speed(min^{-1})

Figure 5 FG Signal Output Circuit: Open Collector

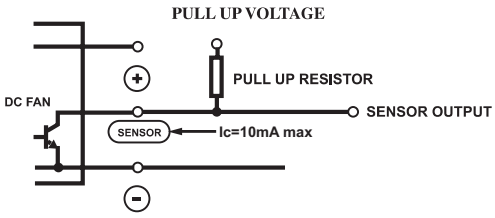

PMW Control Signal

A speed control lead can be provided that will accept a PWM signal from the customer circuit to vary the speed of the fan. The change in speed is linear by changing the Duty-Cycle of the PWM. Open collector type and pull-up voltage is changed by maximum operating voltage and sink current by consuming current. (See Figure 6 below).

Figure 6 Duty Cycle

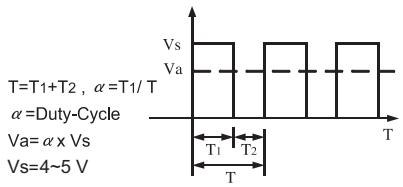

REVISION HISTORY

rev.	description	date
1.0	initial release	08/15/2016
1.01	updated datasheet	07/27/2017
1.02	discontinued model CFM-8025-13-22	11/10/2017
1.03	discontinued CFM-8025-13-11, CFM-8025-23-11, CFM-8025-23-20, and CFM-8025-23-22 models	01/29/2018
1.04	updated to be certified to EN 62368-1 safety standard	07/09/2019
1.05	brand update	02/10/2020
1.06	discontinued CFM-8015-13-10 and CFM-8015-13-20 models	04/28/2021
1.07	discontinued model CFM-8010-13-22	09/24/2021
1.08	discontinued CFM-8010-13-10, CFM-8010-13-11, CFM-8010-13-20, CFM-8015-13-11, CFM-8015-13-22, CFM-8025-13-10, & CFM-8025-13-20 models	10/18/2021

The revision history provided is for informational purposes only and is believed to be accurate.

CUI DEVICES

CUI Devices offers a one (1) year limited warranty. Complete warranty information is listed on our website.

CUI Devices reserves the right to make changes to the product at any time without notice. Information provided by CUI Devices is believed to be accurate and reliable. However, no responsibility is assumed by CUI Devices for its use, nor for any infringements of patents or other rights of third parties which may result from its use.

CUI Devices products are not authorized or warranted for use as critical components in equipment that requires an extremely high level of reliability. A critical component is any component of a life support device or system whose failure to perform can be reasonably expected to cause the failure of the life support device or system, or to affect its safety or effectiveness.

cuidevices.com