MODEL: CLS0231 | DESCRIPTION: SPEAKER

FEATURES

- 23 mm
- round frame
- 1.0 W
- 8 Ω
- neodymium magnet
- paper cone

SPECIFICATIONS

parameter	conditions/description	min	typ	max	units
input power			1.0	1.5	W
impedance	at 1.0 kHz, 1.0 V	6.8	8	9.2	Ω
resonant frequency (Fo)	at 1.0 V	520	650	780	Hz
frequency response		Fo		18,000	Hz
sound pressure level	at 1.0 W, 50 cm, avg at 0.8, 1.0, 1.2, 1.5 kHz	86	89	92	dB
buzz, rattle, etc.	must be normal at sine wave			2.83	V
dimensions	Ø23 x 5.7				mm
magnet	Nd-Fe-B				
cone material	paper				
terminal	solder pads				
weight			3.7		g
operating temperature		-25		70	°C
hand soldering	for maximum 3 seconds	340	350	360	°C
RoHS	yes				

MECHANICAL DRAWING

units: mm

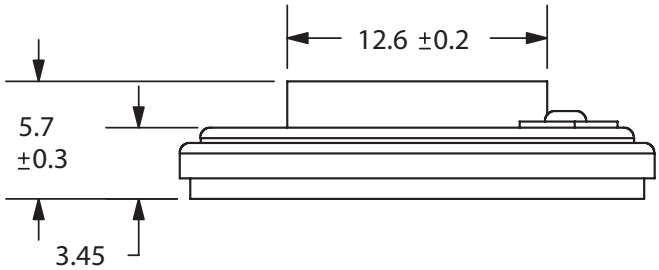

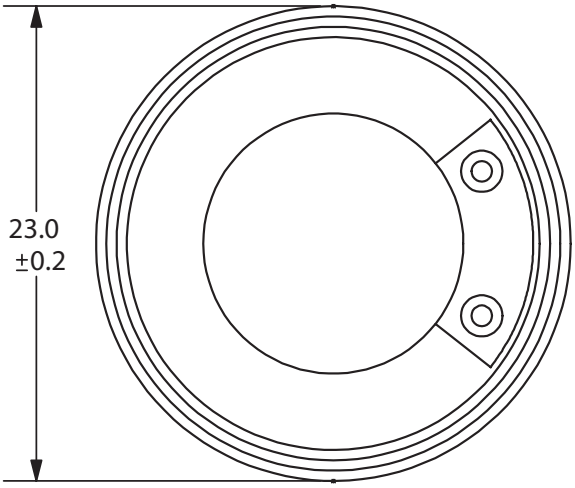

FREQUENCY RESPONSE CURVE

parameter	conditions/description
potentiometer range	50 dB
rectifier	RMS
lower limit frequency	20 Hz
wr. speed	100 mm/sec
zero level	60 dB

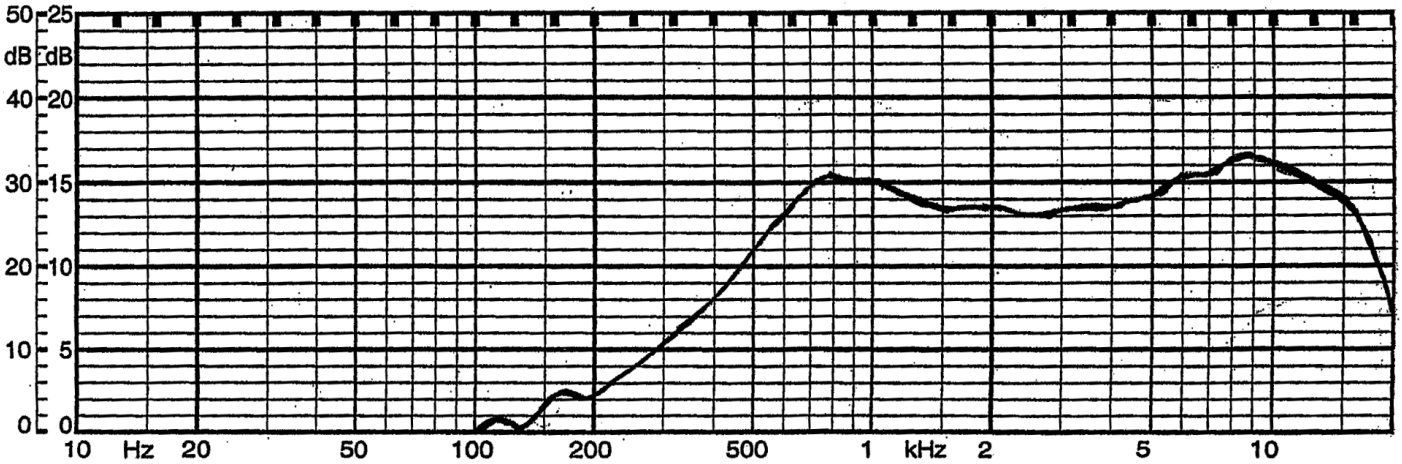

REVISION HISTORY

rev.	description	date
1.0	initial release	07/03/2007
1.01	updated datasheet	02/01/2010
1.02	brand update	08/20/2020
1.03	logo, datasheet style update	08/05/2022

The revision history provided is for informational purposes only and is believed to be accurate.

CUI Devices offers a one (1) year limited warranty. Complete warranty information is listed on our website.

CUI Devices reserves the right to make changes to the product at any time without notice. Information provided by CUI Devices is believed to be accurate and reliable. However, no responsibility is assumed by CUI Devices for its use, nor for any infringements of patents or other rights of third parties which may result from its use.

CUI Devices products are not authorized or warranted for use as critical components in equipment that requires an extremely high level of reliability. A critical component is any component of a life support device or system whose failure to perform can be reasonably expected to cause the failure of the life support device or system, or to affect its safety or effectiveness.