MODEL: CPE-503 | DESCRIPTION: PIEZO BUZZER TRANSDUCER

FEATURES

- feedback pin
- 12 Vdc rating
- driving circuit
- vertical orientation through hole mount
- wide operating temperature range [-30~115 °C]

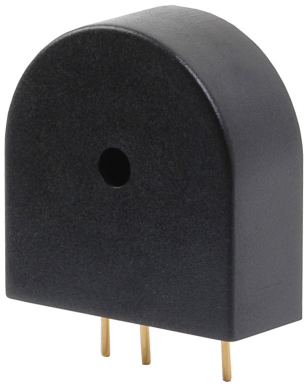

RoHS

SPECIFICATIONS

parameter	conditions/description	min	typ	max	units
rated voltage			12		Vdc
operating voltage		3		28	Vdc
current consumption	at rated voltage			7	mA
rated frequency		2,700	3,200	3,700	Hz
sound pressure level	at 30 cm, rated voltage	72			dB
dimensions	25.0 x 24.0 x 10.0				mm
weight				3.7	g
material	PC+10% glass (black)				
terminal	pin type (Au plating)				
operating temperature		-30		115	°C
storage temperature		-40		125	°C
RoHS	yes				

Notes: 1. All specifications measured at 5~35°C, humidity at 45~85%, under 86~106kPa pressure, unless otherwise noted.

SOLDERABILITY

parameter	conditions/description	min	typ	max	units
hand soldering	for maximun 5 seconds	330		380	°C
wave soldering	see wave soldering profile			260	°C

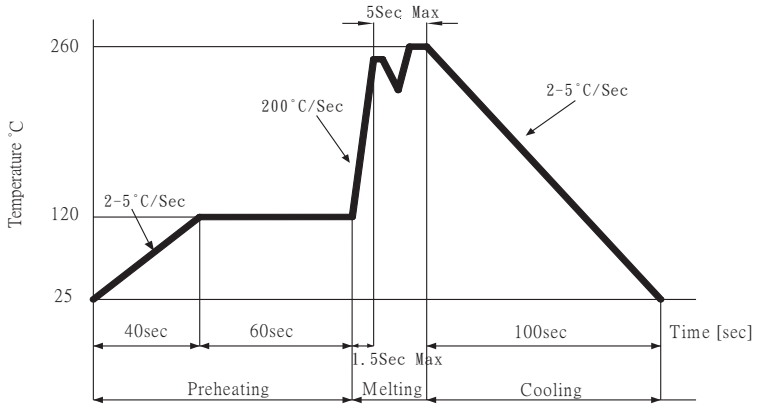

MECHANICAL DRAWING

units: mm
tolerance: ±0.5 mm

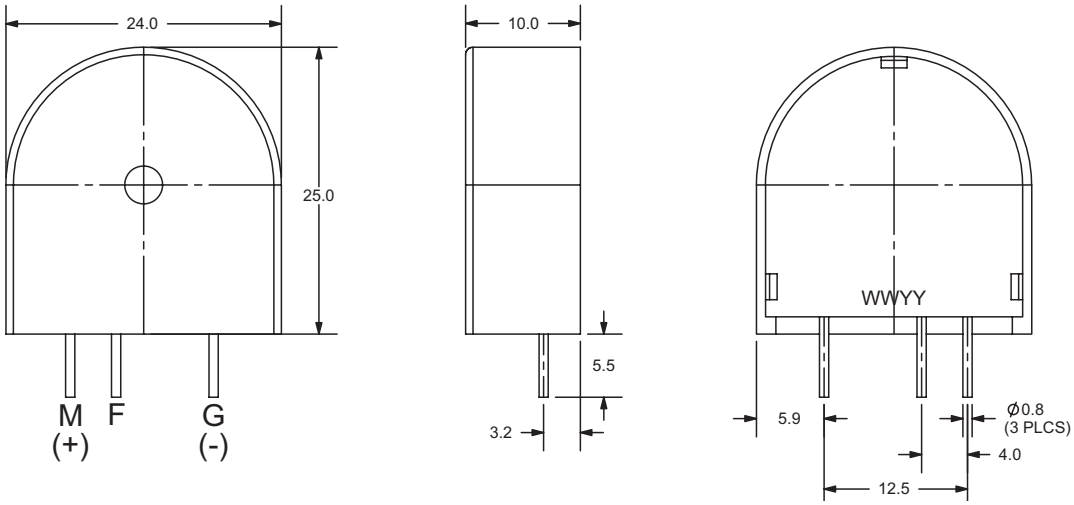

PERFORMANCE CURVES

P: Voltage vs. Sound Pressure Level
I: Voltage vs. Current Consumption
at 30 cm

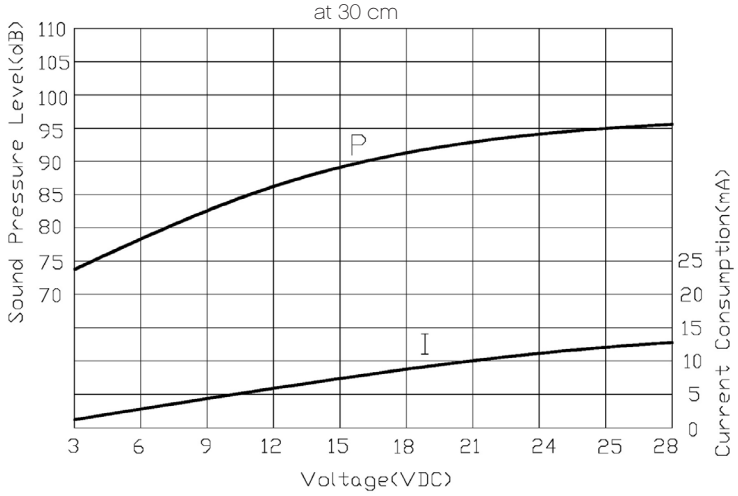

DRIVING CIRCUIT

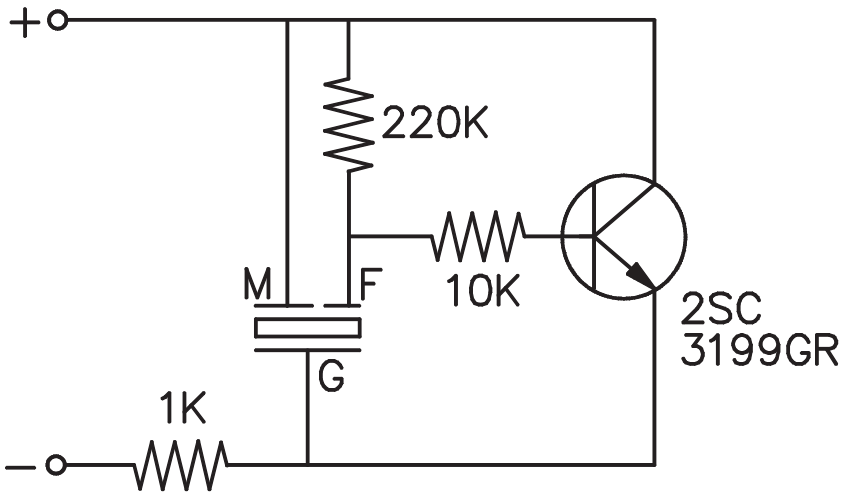

Notes: 1. The current consumption and the sound pressure level are measured by using the recommend driving circuit shown above.

REVISION HISTORY

rev.	description	date
1.0	initial release	11/12/2007
1.01	applied new spec template	01/07/2016
1.02	brand update	11/20/2019
1.03	logo, datasheet style update	08/05/2022

The revision history provided is for informational purposes only and is believed to be accurate.

CUI Devices offers a one (1) year limited warranty. Complete warranty information is listed on our website.

CUI Devices reserves the right to make changes to the product at any time without notice. Information provided by CUI Devices is believed to be accurate and reliable. However, no responsibility is assumed by CUI Devices for its use, nor for any infringements of patents or other rights of third parties which may result from its use.

CUI Devices products are not authorized or warranted for use as critical components in equipment that requires an extremely high level of reliability. A critical component is any component of a life support device or system whose failure to perform can be reasonably expected to cause the failure of the life support device or system, or to affect its safety or effectiveness.

cuidevices.com