MODEL: CSS-66668N | DESCRIPTION: SPEAKER

FEATURES

- 90 dB SPL
- 200 Hz resonant frequency
- Nd-Fe-B magnet

RoHS

SPECIFICATIONS

parameter	conditions/description	min	typ	max	units
input power	maximum power: IEC-60268-5, filter 60s on/120s off, 10 cycles at room temp		3.0	4.0	W
impedance	at 0.8 kHz	6.8	8	9.2	Ω
resonant frequency (Fo)	at 1.0 V	160	200	240	Hz
frequency response	output SPL -10 dB	Fo		15,000	Hz
sound pressure level	at 1.0 W, 0.1 m ave, at 0.6, 0.8, 1.0, 1.2 kHz at 3.0 W, 0.5 m ave, at 0.6, 0.8, 1.0, 1.2 kHz	98 88	101 91	104 94	dB dB
distortion	at 1.0 kHz, 1.0 W			5	%
buzz, rattle, etc.	must be normal at sine wave between Fo ~ 20,000 Hz		4.9		V
dimensions	66 x 66 x 29				mm
magnet	Nd-Fe-B				
material	metal				
cone material	paper & foam				
terminal	solder terminals				
weight			101		g
operating temperature		-20		55	°C
storage temperature		-30		70	°C
RoHS	yes				

Notes: 1. All specifications measured at 15~35°C, humidity at 45~85%, under 86~106 kPa pressure, unless otherwise noted.

SOLDERABILITY

parameter	conditions/description	min	typ	max	units
hand soldering	for maximum 3 seconds	370	380	390	°C

MECHANICAL DRAWING

units: mm
tolerance: ±0.2 mm

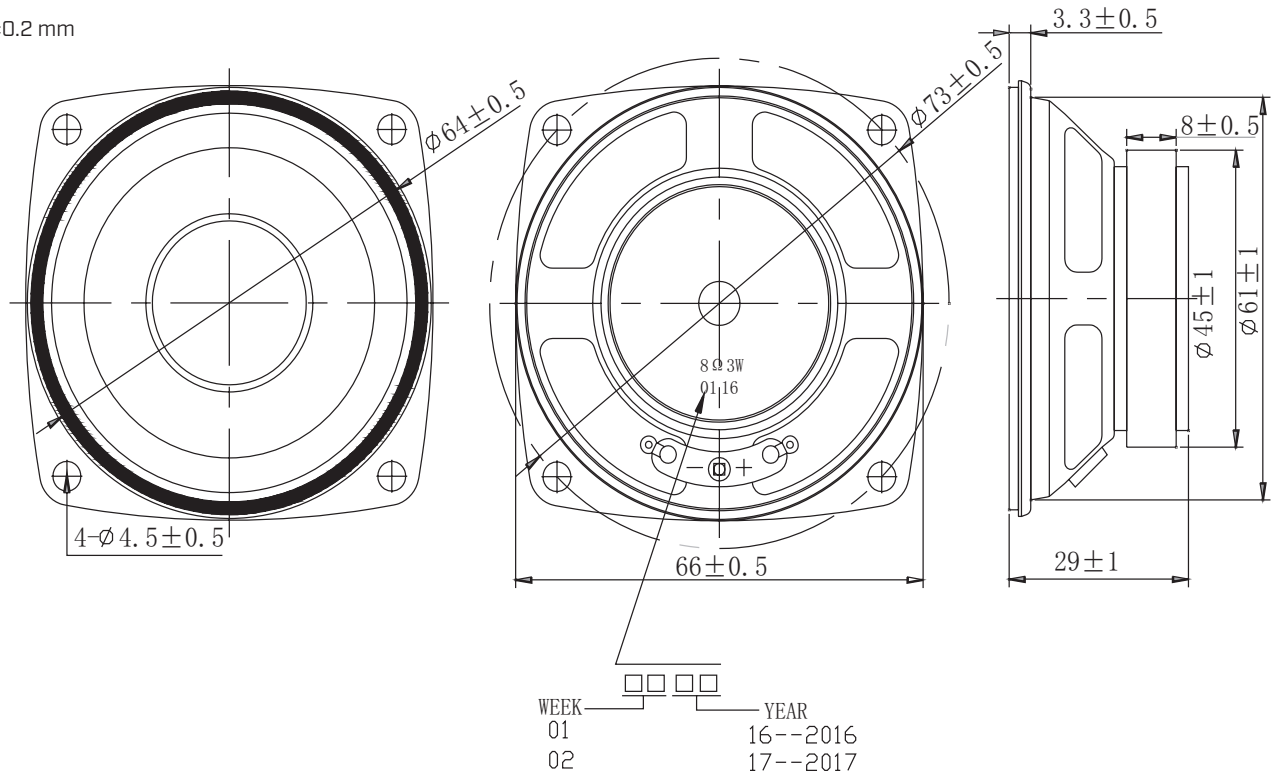

FREQUENCY RESPONSE CURVE

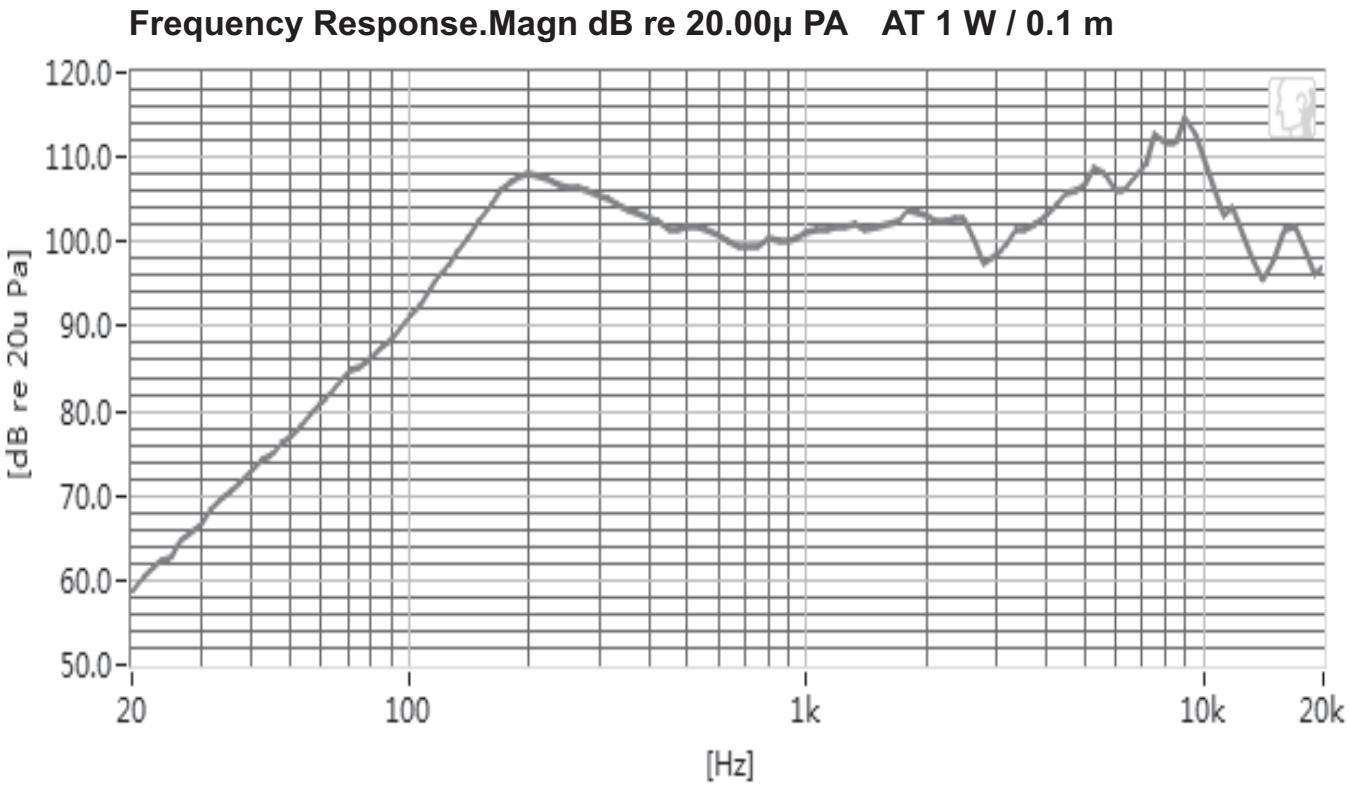

PACKAGING

units: mm

Tray Size: 415 x 415 x 40 mm
Carton Size: 450 x 450 x 210 mm
Tray QTY: 25 pcs per tray
Carton QTY: 100 pcs per carton

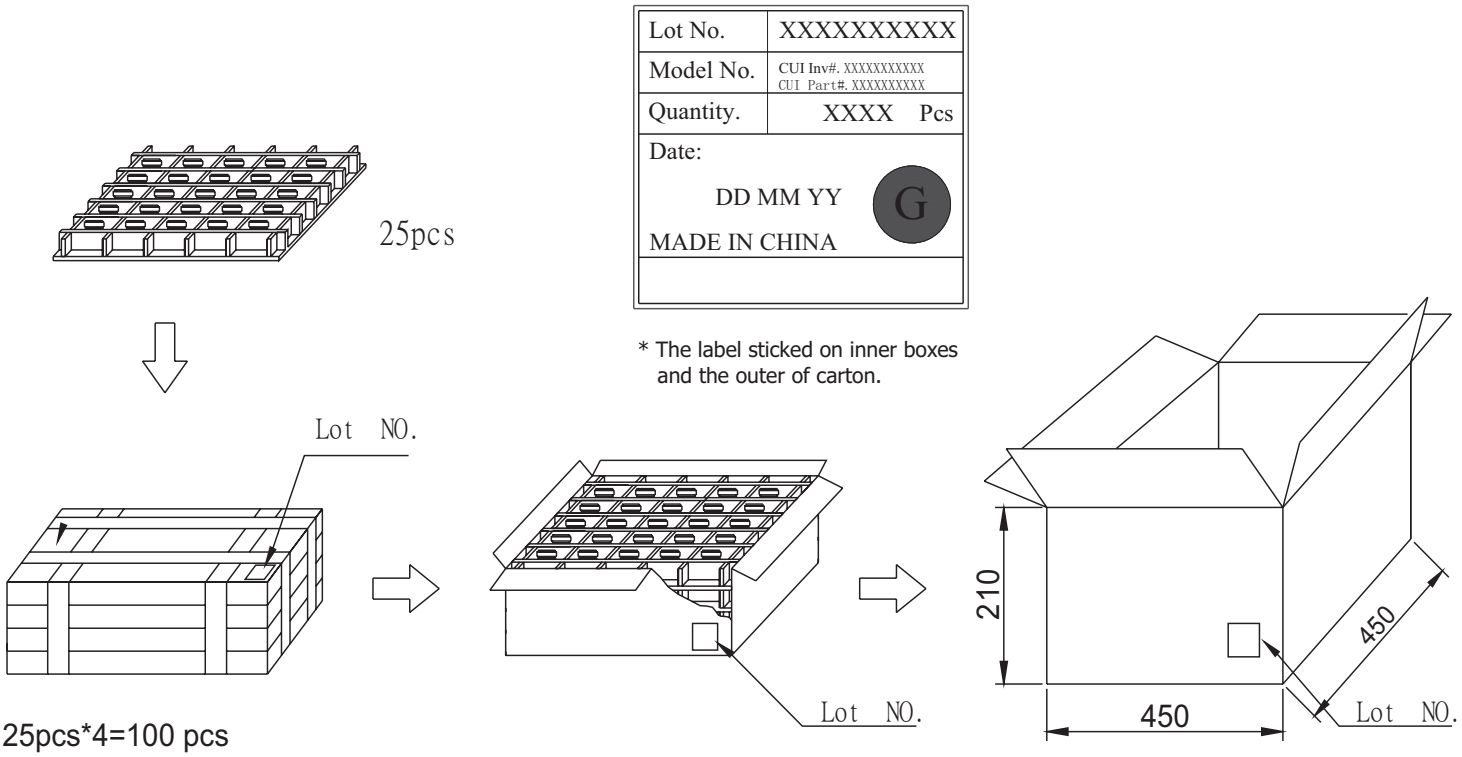

Lot No.	XXXXXXXXXX
Model No.	CUI Inv#. XXXXXXXXXX CUI Part#. XXXXXXXXX
Quantity.	XXXX Pcs
Date: DD MM YY MADE IN CHINA	G

* The label sticked on inner boxes and the outer of carton.

REVISION HISTORY

rev.	description	date
1.0	initial release	06/28/2016
1.01	brand update	01/22/2020
1.02	logo, datasheet style update	08/05/2022

The revision history provided is for informational purposes only and is believed to be accurate.

CUI Devices offers a one (1) year limited warranty. Complete warranty information is listed on our website.

CUI Devices reserves the right to make changes to the product at any time without notice. Information provided by CUI Devices is believed to be accurate and reliable. However, no responsibility is assumed by CUI Devices for its use, nor for any infringements of patents or other rights of third parties which may result from its use.

CUI Devices products are not authorized or warranted for use as critical components in equipment that requires an extremely high level of reliability. A critical component is any component of a life support device or system whose failure to perform can be reasonably expected to cause the failure of the life support device or system, or to affect its safety or effectiveness.

cuidevices.com