CUI DEVICES

MODEL: MR-2501 | **DESCRIPTION:** 2.5 MM AUDIO JACK

FEATURES
- 2.5 mm audio jack
- cable mount
- mono audio

RoHS

SPECIFICATIONS

parameter	conditions/description	min	typ	max	units
contact resistance	between terminal and mating plug			50	mΩ
insulation resistance	at 500 Vdc	100			MΩ
voltage withstand	for 1 minute			500	Vac
insertion/withdrawal force		0.4		2	kg
operating temperature		-10		50	°C
life			3,000		cycles
flammability rating	UL94V-2 (PA only)				
RoHS	yes				

SOLDERABILITY

parameter	conditions/description	min	typ	max	units
hand soldering	for 2 seconds max		360		°C

MECHANICAL DRAWING

units: mm
tolerance: ±0.3 mm

	MATERIAL	PLATING
(1) sleeve	brass	nickel
(2) housing	PA	
(3) contact	phosphor bronze	nickel
(4) terminal	brass	nickel
(5) cap	PE	

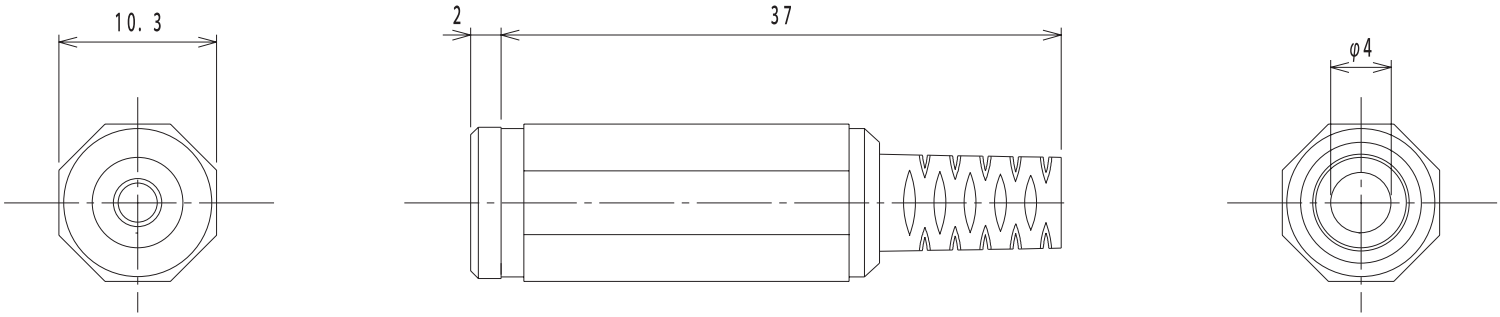

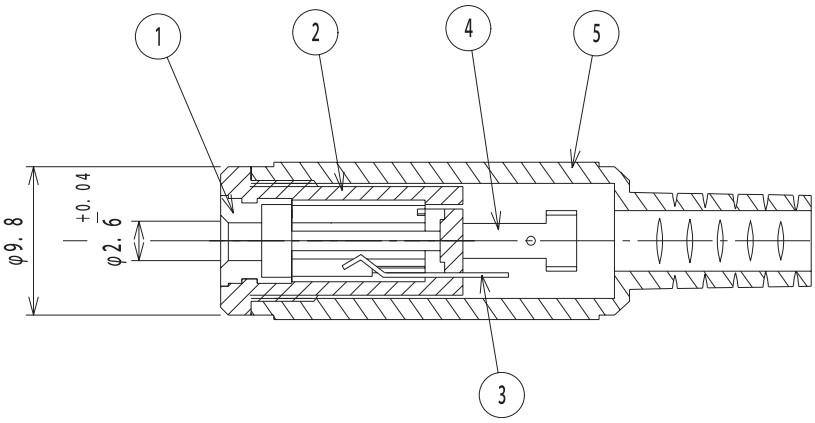

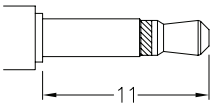

ø2.5 MATE PLUG

Model No.	MR-2501
Schematic	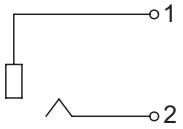
PIN	
1	sleeve
2	tip

REVISION HISTORY

rev.	description	date
1.0	initial release	09/06/2006
1.01	added schematic	12/05/2006
1.02	design improvement of body and tip	01/09/2015
1.03	brand update	10/18/2019

The revision history provided is for informational purposes only and is believed to be accurate.

CUI DEVICES

CUI Devices offers a one (1) year limited warranty. Complete warranty information is listed on our website.

CUI Devices reserves the right to make changes to the product at any time without notice. Information provided by CUI Devices is believed to be accurate and reliable. However, no responsibility is assumed by CUI Devices for its use, nor for any infringements of patents or other rights of third parties which may result from its use.

CUI Devices products are not authorized or warranted for use as critical components in equipment that requires an extremely high level of reliability. A critical component is any component of a life support device or system whose failure to perform can be reasonably expected to cause the failure of the life support device or system, or to affect its safety or effectiveness.