CUDEVICES



# **MODEL:** PJ-037AH | **DESCRIPTION:** DC POWER JACK

## FEATURES

- 2.0 mm center pin
- 5.0 A rating
- right angle orientation
- through hole

RoHS

## SPECIFICATIONS

| parameter | conditions/description | min | typ | max | units |
|---|---|---|---|---|---|
| rated input voltage | | | 24 | | Vdc |
| rated input current | | | | 5 | A |
| contact resistance | between terminal and mating plug<br>between terminal in a closed circuit | | | 100<br>30 | mΩ<br>mΩ |
| insulation resistance | at 500 Vdc | 100 | | | MΩ |
| voltage withstand | for 1 minute | | | 500 | Vac |
| insertion/withdrawal force | | 0.3 | | 2 | kg |
| operating temperature | | -25 | | 85 | °C |
| life | | | 5,000 | | cycles |
| flammability rating | UL94V-0 | | | | |
| RoHS | yes | | | | |

## SOLDERABILITY

| parameter | conditions/description | min | typ | max | units |
|---|---|---|---|---|---|
| wave soldering | for max 5 seconds | 255 | 260 | 265 | °C |

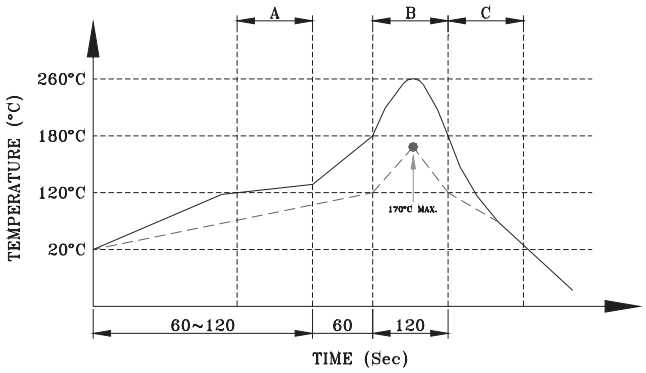


A. Preheating
B. Soldering
C. Cooling

——— Pin Temperature
– – – – Component Temperature

## MECHANICAL DRAWING

units: mm
tolerance:
X.X ±0.20 mm
X.XX ±0.15 mm
X.XXX ±0.10 mm
PCB: ±0.05 mm
unless otherwise specified

| DESCRIPTION | MATERIAL | PLATING/COLOR |
|---|---|---|
| center pin | copper alloy | nickel |
| terminal 1 | brass t=0.3 mm | nickel-silver |
| terminal 2 | phosphor bronze t=0.3 mm | nickel-silver |
| housing | PBT (UL94V-0) | black |
| cover | PBT (UL94V-0) | black |

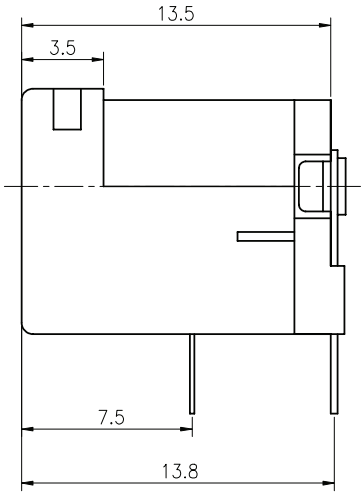


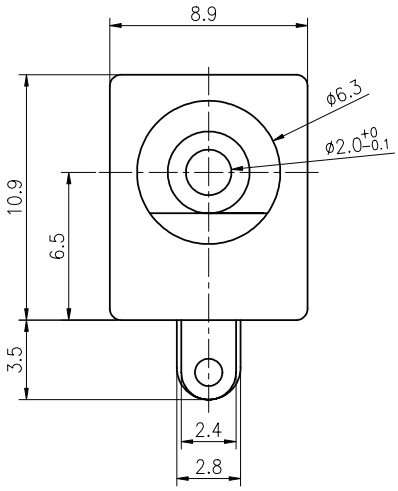


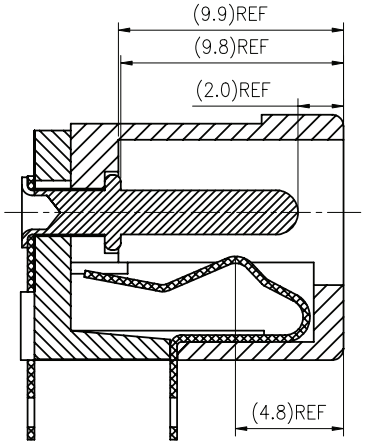


SECTION A-A

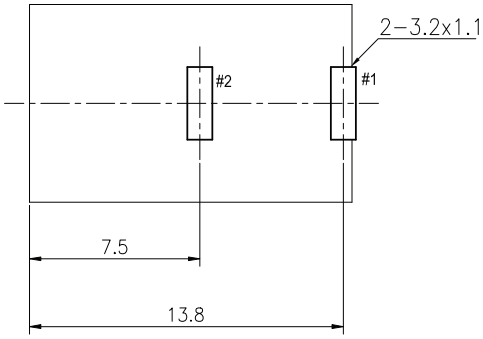


Recommended PCB Layout
Top View

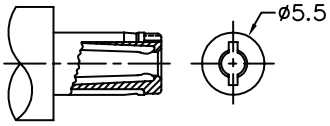


MATING PLUG
Jack Insertion Depth: 9.8 mm

| | |
|---|---|
| SCHEMATIC | 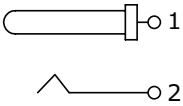  |
| Model | PJ-037AH |
| Center Pin | Ø2.0 mm |

## REVISION HISTORY

| rev. | description | date |
|---|---|---|
| 1.0 | initial release | 07/30/2007 |
| 1.01 | cut away area modified | 08/28/2008 |
| 1.02 | added dimensions | 06/24/2011 |
| 1.03 | applied new spec template | 01/02/2014 |
| 1.04 | increased voltage rating | 04/14/2016 |
| 1.05 | brand update | 10/29/2019 |
| 1.06 | logo, datasheet style update | 08/05/2022 |
| 1.07 | product reengineered for improved manufacturability and production yield, see PCN for details | 02/23/2023 |

The revision history provided is for informational purposes only and is believed to be accurate.

CUI Devices offers a one (1) year limited warranty. Complete warranty information is listed on our website.

CUI Devices reserves the right to make changes to the product at any time without notice. Information provided by CUI Devices is believed to be accurate and reliable. However, no responsibility is assumed by CUI Devices for its use, nor for any infringements of patents or other rights of third parties which may result from its use.

CUI Devices products are not authorized or warranted for use as critical components in equipment that requires an extremely high level of reliability. A critical component is any component of a life support device or system whose failure to perform can be reasonably expected to cause the failure of the life support device or system, or to affect its safety or effectiveness.