CUI INC
a bel group

SERIES: PQA30-T | DESCRIPTION: DC-DC CONVERTER

FEATURES

- up to 30 W isolated output
- 2:1 input range (18~36 Vdc, 36~75 Vdc)
- smaller package
- single, regulated output
- 1,500 Vdc isolation
- short circuit, over current, and over voltage protections
- inverse polarity protection
- remote on/off
- operating temperature range (-40~85°C)
- six sided metal shielding
- efficiency up to 87%
- EN 62368-1

DISCONTINUED

MODEL

MODEL	input voltage typ (Vdc)	input voltage range (Vdc)	output voltage (Vdc)	output current min (A)	output current max (A)	output power max (W)	ripple and noise[1] max (mVp-p)	efficiency typ (%)
PQA30-D24-S3-T	24	18~36	3.3	0.60	6	20	120	85
PQA30-D24-S5-T	24	18~36	5	0.60	6	30	120	86
PQA30-D24-S9-T	24	18~36	9	0.333	3.333	30	120	86
PQA30-D24-S12-T	24	18~36	12	0.25	2.5	30	120	86
PQA30-D24-S15-T	24	18~36	15	0.20	2	30	120	87
PQA30-D24-S24-T	24	18~36	24	0.125	1.25	30	120	87
PQA30-D48-S3-T	48	36~75	3.3	0.60	6	20	120	85
PQA30-D48-S5-T	48	36~75	5	0.60	6	30	120	86
PQA30-D48-S12-T	48	36~75	12	0.25	2.5	30	120	87
PQA30-D48-S15-T	48	36~75	15	0.20	2	30	120	87
PQA30-D48-S24-T	48	36~75	24	0.125	1.25	30	120	86

Notes: 1. Ripple and noise are measured at 20 MHz BW by "parallel cable" method with 1 µF ceramic and 10 µF electrolytic capacitors on the output.

PART NUMBER KEY

PQA30 - DXX - SXX - TX

- PQA30 — Base Number
- DXX — Input Voltage
- SXX — Output Voltage
- TX — Mounting Type: T = Chassis Mount
- Heatsink*: "blank" = no heatsink; H = with heatsink

Notes: *Discontinued heatsink versions.

INPUT

parameter	conditions/description	min	typ	max	units
operating input voltage	24 Vdc input models 48 Vdc input models	18 36	24 48	36 75	Vdc Vdc
start-up voltage	24 Vdc input models 48 Vdc input models		17.8 35.8	18 36	Vdc Vdc
under voltage shutdown	24 Vdc input models 48 Vdc input models	16 32			Vdc Vdc
surge voltage	for maximum of 1 second 24 Vdc input models 48 Vdc input models	 -0.7 -0.7		 50 100	 Vdc Vdc
start-up time	nominal input, constant load		10		ms
CTRL[1]	models ON (CTRL open or connect TTL high level, 2.5~12 Vdc)				
	models OFF (CTRL connect GND or low level, 0~1.2 Vdc)				
	input current (models OFF)		1		mA
filter	pi filter				

Note 1. CTRL pin voltage is referenced to GND.

OUTPUT

parameter	conditions/description	min	typ	max	units
line regulation	full load, input voltage from low to high		±0.2	±0.5	%
load regulation	10% to 100% load		±0.5	±1	%
voltage accuracy			±1	±3	%
adjustability			±10		%
switching frequency	PWM mode		300		kHz
transient recovery time	25% load step change		300	500	μs
transient response deviation	25% load step change		±3	±5	%
temperature coefficient	100% load		±0.02		%/°C

PROTECTIONS

parameter	conditions/description	min	typ	max	units
short circuit protection	hiccup, automatic recovery				
over current protection		120	130	150	%
over voltage protection	3.3 Vdc output models 5 Vdc output models 9 Vdc output models 12 Vdc output models 15 Vdc output models 24 Vdc output models		3.96 6 10.8 15 18 28		Vdc Vdc Vdc Vdc Vdc Vdc

DISCONTINUED

SAFETY AND COMPLIANCE

parameter	conditions/description	min	typ	max	units
isolation voltage	input to output for 1 minute at 1 mA max.	1,500			Vdc
isolation resistance	input to output at 500 Vdc	1,000			MΩ
safety approvals[1]	certified to 62368-1: EN				
conducted emissions	CISPR22/EN55022 class A (no circuit required); class B (external circuit required, see Figure 1-b)				
radiated emissions	CISPR22/EN55022 class A (no circuit required); class B (external circuit required, see Figure 1-b)				
ESD	IEC/EN61000-4-2 class B, contact ± 4kV				
radiated immunity	IEC/EN61000-4-3 class A, 10V/m				
EFT/burst	IEC/EN61000-4-4 class B, ± 2kV (external circuit required, see Figure 1-a)				
surge	IEC/EN61000-4-5 class B, ± 2kV (external circuit required, see Figure 1-a)				
conducted immunity	IEC/EN61000-4-6 class A, 3 Vr.m.s				
voltage dips & interruptions	IEC/EN61000-4-29 class B, 0%-70%				
MTBF	as per MIL-HDBK-217F @ 25°C	1,000,000			hours
RoHS	2011/65/EU				

Note 1. CE mark is only on models without heatsink.

ENVIRONMENTAL

parameter	conditions/description	min	typ	max	units
operating temperature	see derating curves	-40		85	°C
storage temperature		-55		125	°C
storage humidity	non-condensing	5		95	%
case temperature	at full load, operating temperature curve range			105	°C
vibration	10~55Hz, 30 min. along x, y, and z axis			10	G

MECHANICAL

parameter	conditions/description	min	typ	max	units
dimensions	chassis mount: 76.0 x 31.5 x 21.2 chassis mount with heatsink: 76.0 x 31.5 x 25.1				mm mm
case material	aluminum alloy				
weight	chassis mount chassis mount with heatsink		44 57		g g

DISCONTINUED

MECHANICAL DRAWING

CHASSIS MOUNT

units: mm[inch]
tolerance: ±0.50[±0.020]

wire range: 24~12 AWG

PIN CONNECTIONS	
PIN	Function
1	Ctrl
2	GND
3	Vin
4	Trim
5	0V
6	+Vo

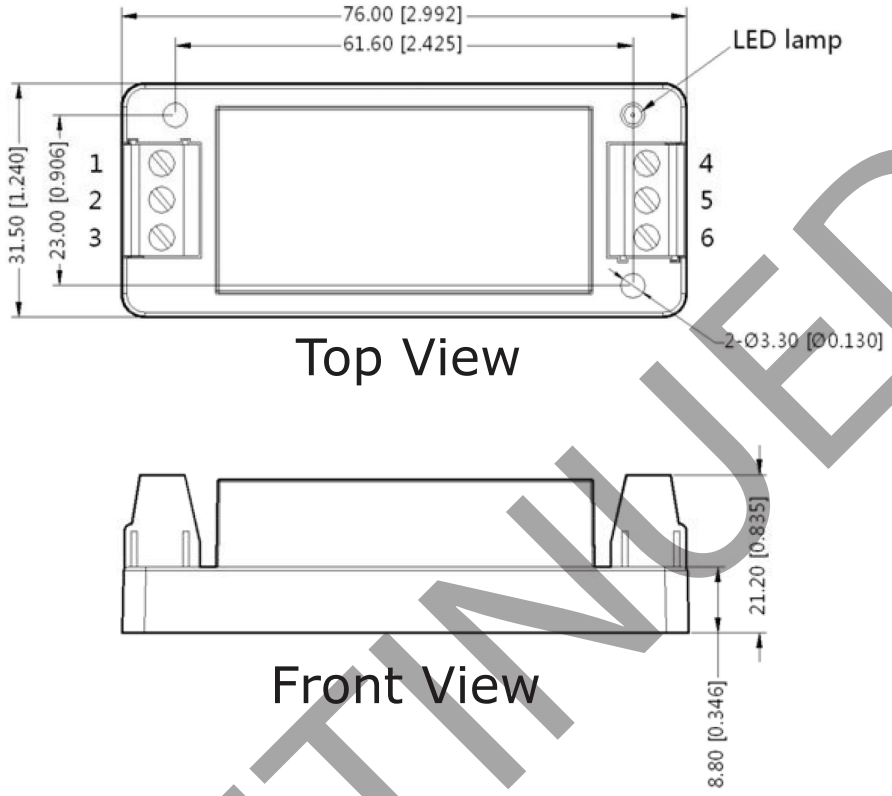

CHASSIS MOUNT WITH HEATSINK

units: mm[inch]
tolerance: ±0.50[±0.020]

wire range: 24~12 AWG

PIN CONNECTIONS	
PIN	Function
1	Ctrl
2	GND
3	Vin
4	Trim
5	0V
6	+Vo

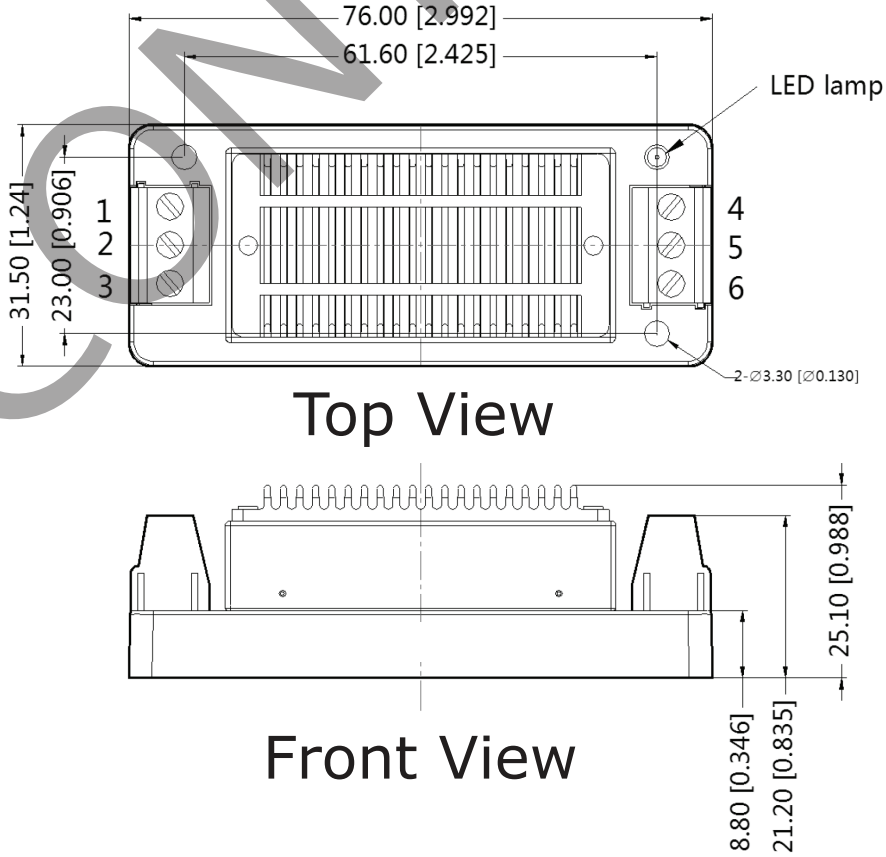

DISCONTINUED

DERATING CURVES

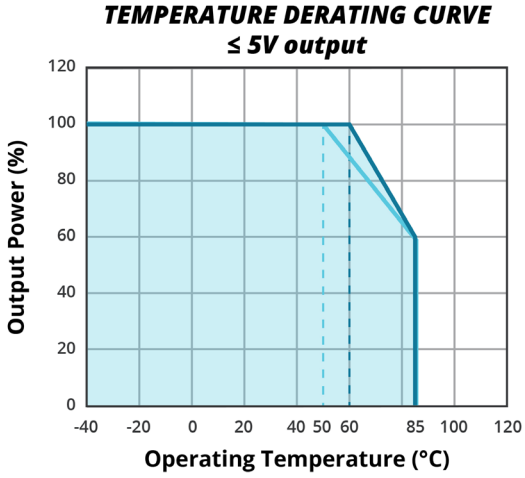

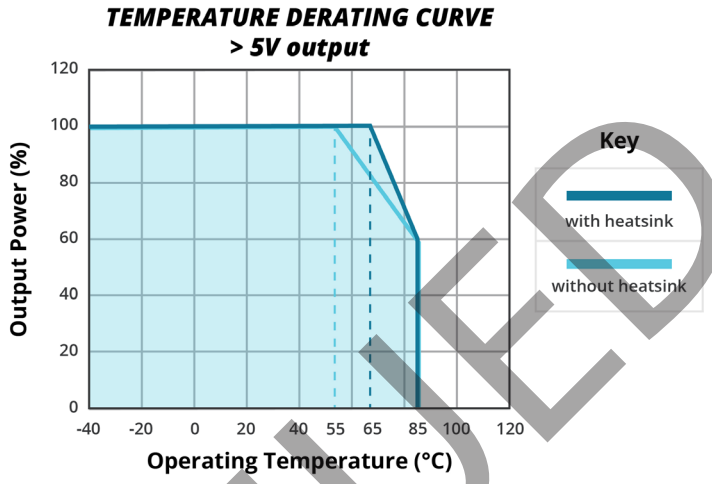

EMC RECOMMENDED CIRCUIT

Figure 1

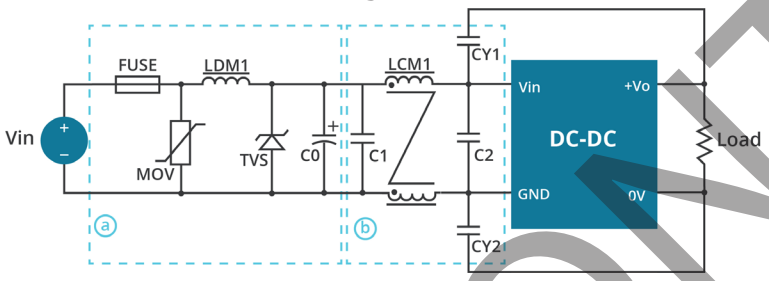

Table 1

Recommended external circuit components		
Vin (Vdc)	24	48
FUSE	choose according to input current	
MOV	S14K35	S14K60
LDM1	56µH	56µH
TVS	SMCJ48A	SMCJ90A
C0	330µF/50V	330µF/100V
C1, C2	4.7µF/50V	2.2µF/100V
LCM1	1mH	1mH
CY1, CY2	1nF/2kV	1nF/2kV

TEST CONFIGURATION

Figure 2

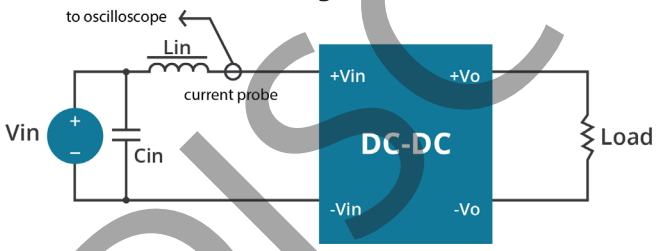

Table 2

External components	
Lin	4.7µH
Cin	220µF, ESR < 1.0Ω at 100 kHz

Note: 1. Input reflected-ripple current is measured with an inductor Lin and Capacitor Cin to simulate source impedance.

DISCONTINUED

APPLICATION NOTES

1. **Requirement on output load**
   To ensure this module can operate efficiently and reliably, the minimum output load cannot be less than 10% of the full load during operation. If the actual output power is small, please connect a resistor at the output end in parallel to increase the load.

2. **Recommended circuit**
   This series has been tested according to the following recommended testing circuit before leaving the factory. This series should be tested under load (see Figure 3). If you want to further decrease the input/output ripple, you can increase capacitance properly or choose capacitors with low ESR (see Table 3). However, the capacitance must not exceed the maximum capacitive load or a start-up problem might arise (see Table 4).

Figure 3

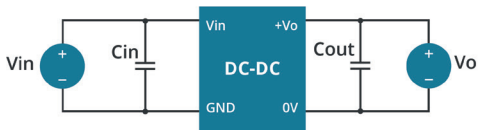

Table 3

Vout (Vdc)	Cin (μF)	Cout (μF)
3.3	100	220
5	100	220
9	100	100
12	100	100
15	100	100
24	100	47

Table 4

Vout (Vdc)	Max. Capacitive Load (μF)
3.3	6800
5	6800
9	680
12	680
15	680
24	470

3. **Output Voltage Trimming**
   Leave open if not used.

Figure 4

Application Circuit for Trim Pin
(part in broken line is the interior of models)

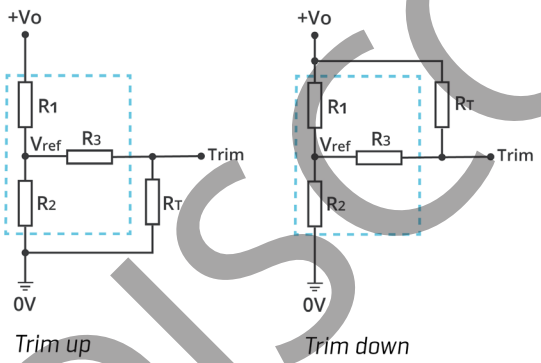

Formula for Trim Resistor

$$\text{up: } R_T = \frac{aR_2}{R_2 - a} - R_3 \qquad a = \frac{Vref}{Vo' - Vref} \cdot R_1$$

$$\text{down: } R_T = \frac{aR_1}{R_1 - a} - R_3 \qquad a = \frac{Vo' - Vref}{Vref} \cdot R_2$$

Note: Value for R1, R2, R3, and Vref (see Table 5)
R_T: Trim Resistor
a: User-defined parameter, no actual meanings
Vo': The trim up/down voltage

Table 5

Vout (Vdc)	R1 (kΩ)	R2 (kΩ)	R3 (kΩ)	Vref (V)
3.3	4.801	2.863	12	1.24
5	2.883	2.864	10	2.5
9	7.5	2.864	15	2.5
12	10.971	2.864	15	2.5
15	14.497	2.864	15	2.5
24	24.872	2.863	20	2.5

Notes:
1. Minimum load shouldn't be less than 10%, otherwise ripple may increase dramatically. Operation under minimum load will not damage the converter, however, they may not meet all specifications listed.
2. Maximum capacitive load is tested at input voltage range and full load.
3. All specifications are measured at Ta=25°C, humidity<75%, nominal input voltage and rated output load unless otherwise specified.

DISCONTINUED

REVISION HISTORY

rev.	description	date
1.0	initial release	07/08/2014
1.01	discontinued heat sink versions	06/21/2019
1.02	safeties updated in features and safety approvals line	01/19/2021
1.03	derating curves and circuit figures updated	08/30/2021

The revision history provided is for informational purposes only and is believed to be accurate.

DISCONTINUED

CUI INC
a bel group

Headquarters
20050 SW 112th Ave.
Tualatin, OR 97062
800.275.4899

Fax 503.612.2383
cui.com
techsupport@cui.com

CUI offers a two (2) year limited warranty. Complete warranty information is listed on our website.

CUI reserves the right to make changes to the product at any time without notice. Information provided by CUI is believed to be accurate and reliable. However, no responsibility is assumed by CUI for its use, nor for any infringements of patents or other rights of third parties which may result from its use.

CUI products are not authorized or warranted for use as critical components in equipment that requires an extremely high level of reliability. A critical component is any component of a life support device or system whose failure to perform can be reasonably expected to cause the failure of the life support device or system, or to affect its safety or effectiveness.