CUI INC
a bel group

SERIES: PQME1-M | DESCRIPTION: DC-DC CONVERTER

FEATURES

- 0.75 W isolated output
- regulated output
- compact SMT package
- single output models
- continuous short circuit protection
- -40~85 °C temperature range
- 1500 Vdc isolation
- no load input current as low as 5 mA
- industry standard pin-out
- efficiency up to 74%

RoHS

MODEL

MODEL	input voltage typ (Vdc)	input voltage range (Vdc)	output voltage (Vdc)	output current min (mA)	output current max (mA)	output power max (W)	ripple & noise[1] max (mVp-p)	efficiency[2] typ (%)
PQME1-S5-S3-M	5	4.75~5.25	3.3	20	200	0.66	75	68
PQME1-S5-S5-M	5	4.75~5.25	5	15	150	0.75	75	72
PQME1-S5-S9-M	5	4.75~5.25	9	9	83	0.75	75	72
PQME1-S5-S12-M	5	4.75~5.25	12	7	62	0.75	75	73
PQME1-S5-S15-M	5	4.75~5.25	15	5	50	0.75	75	74
PQME1-S12-S5-M	12	11.4~12.6	5	15	150	0.75	75	72
PQME1-S12-S12-M	12	11.4~12.6	12	7	62	0.75	75	73
PQME1-S12-S15-M	12	11.4~12.6	15	5	50	0.75	75	74

Notes:
1. Measured at nominal input, 20 MHz bandwidth oscilloscope, with 10 µF tantalum and 1 µF ceramic capacitors on the output.
2. Measured at nominal input voltage, full load.
3. All specifications are measured at Ta=25°C, humidity < 75%, nominal input voltage, and rated output load unless otherwise specified.

PART NUMBER KEY

PQME1-S XX - S XX - M- XX

- PQME1 — Base Number
- XX (first) — Input Voltage
- XX (second) — Output Voltage
- M — Mounting Style: SMT
- XX (last) — Packaging: "blank" = Tube; TR = Tape and Reel

INPUT

parameter	conditions/description		min	typ	max	units
operating input voltage	5 Vdc input model 12 Vdc input model		4.75 11.4	5 12	5.25 12.6	Vdc Vdc
current	5 Vdc input model	3.3, 5 Vdc output model 9, 12 Vdc output model 15 Vdc output models			234 221 215	mA mA mA
	12 Vdc input model	5 Vdc output model 12 Vdc output model 15 Vdc output model			92 91 90	mA mA mA
filter	filter capacitor					

OUTPUT

parameter	conditions/description	min	typ	max	units
maximum capacitive load[4]	3.3, 5 Vdc output models 9 Vdc output models 12, 15 Vdc output models			2,400 1,000 560	µF µF µF
voltage accuracy				±3	%
line regulation	for Vin change of 1%			±0.25	%
load regulation	from 10% to full load 3.3 Vdc output models all other models			 ±3 ±2	 % %
switching frequency	100% load, nominal input voltage		270		kHz
temperature coefficient	at full load		±0.02		%/°C

Note: 4. Tested at input voltage range and full load.

PROTECTIONS

parameter	conditions/description	min	typ	max	units
short circuit protection	continuous, self recovery				

SAFETY AND COMPLIANCE

parameter	conditions/description	min	typ	max	units
isolation voltage	input to output for 1 minute at 1 mA input to output for 1 second at 1 mA	1,500 3,000			Vdc Vdc
isolation resistance	input to output at 500 Vdc	1,000			MΩ
isolation capacitance	input to output, 100 kHz / 0.1 V		20		pF
safety approvals	designed to meet 62368-1: EN, BS EN				
conducted emissions	CISPR32/EN55032, class B (external circuit required, see Figure 2)				
radiated emissions	CISPR32/EN55032, class B (external circuit required, see Figure 2)				
ESD	IEC/EN61000-4-2, air ± 8 kV; contact ± 4 kV, class B				
MTBF	as per MIL-HDBK-217F, 25°C	3,500,000			hours
RoHS	yes				

ENVIRONMENTAL

parameter	conditions/description	min	typ	max	units
operating temperature	see derating curves	-40		85	°C
storage temperature		-55		125	°C
storage humidity	non-condensing			95	%
case temperature rise	3.3 Vdc output model at 25°C all other models at 25°C		30 25		°C °C

DERATING CURVE

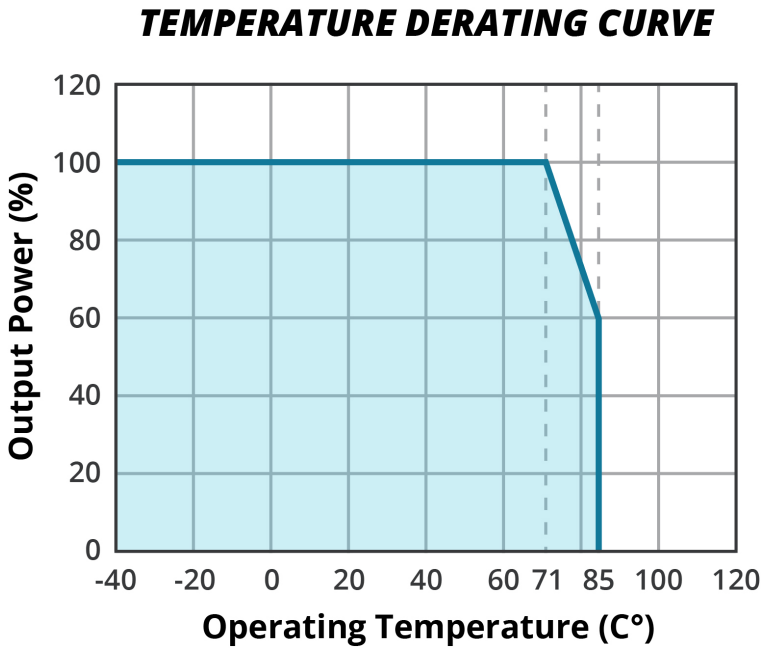

SOLDERABILITY

parameter	conditions/description	min	typ	max	units
reflow soldering	see reflow soldering profile Maximum duration >217°C is 60 seconds. For actual application, refer to IPC/JEDEC J-STD-020D.1			245	°C

WAVE SOLDERING PROFILE

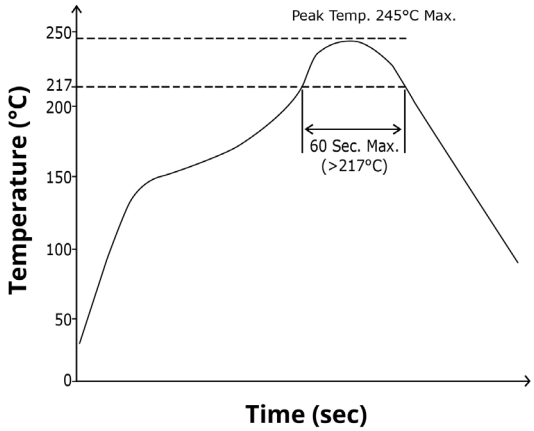

MECHANICAL

parameter	conditions/description	min	typ	max	units
dimensions	13.20 x 8.50 x 7.25[0.520 x 0.335 x 0.285 inch]				mm
case material	black flame-retardant and heat-resistant plastic (UL94V-0)				
weight			1.4		g

MECHANICAL DRAWING

units: mm [inch]
tolerance: ±0.25[±0.010]
pin section tolerance: ±0.10[±0.004]

PIN CONNECTIONS	
PIN	Function
1	GND
2	Vin
4	0V
5	+Vout
8	NC

NC = No connect

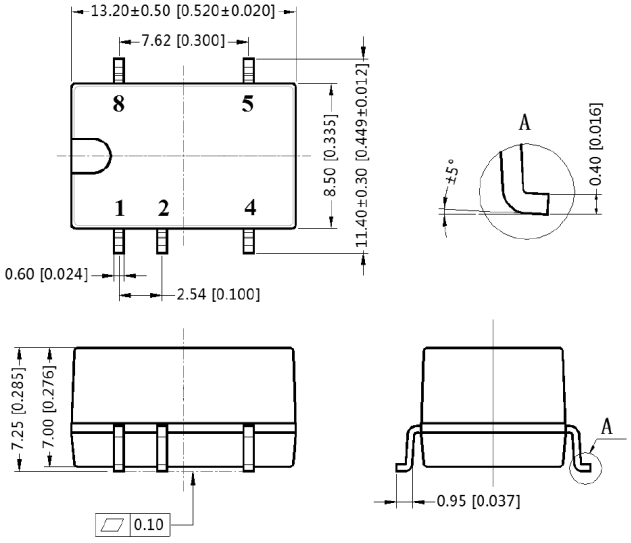

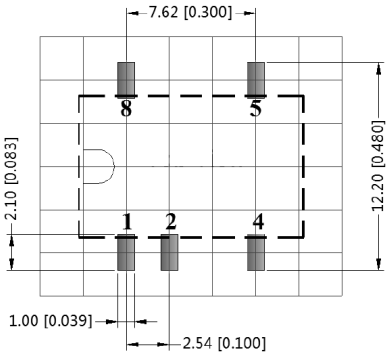

Note: Grid 2.54*2.54mm
Recommended PCB Layout
Top View

APPLICATION CIRCUIT

If you want to further reduce the input and output ripple, a filter capacitor may be connected to the input and output terminals (Figure 1) provided that the capacitance is less than the maximum capacitive load of the model, otherwise start-up problems may be caused if the capacitance is too large.

Figure 1

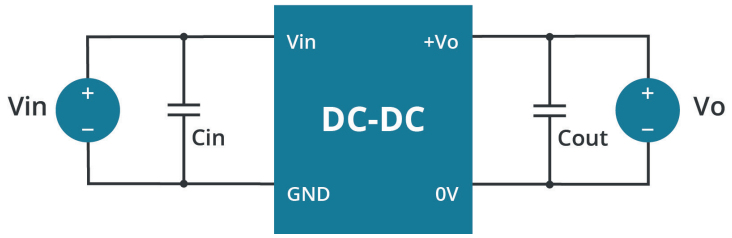

Table 1

Vin (Vdc)	Cin (µF)	Vo (Vdc)	Cout (µF)
5	4.7	3.3, 5	10
		9, 12	2.2
		15	1

EMC RECOMMENDED CIRCUIT

Figure 2

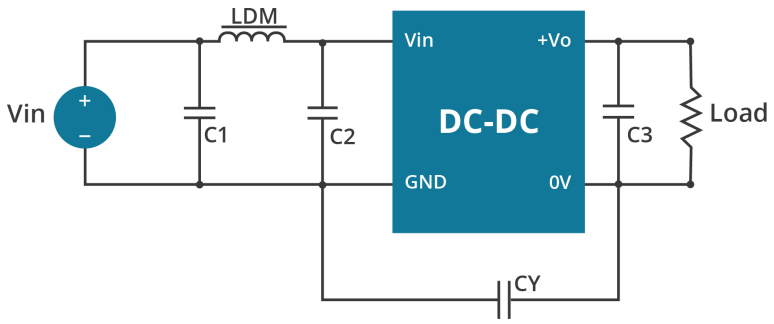

Table 2

Recommended External Circuit Components		
Vo (Vdc)	3.3, 5, 9	12, 15
CY	--	1 nF / 2 kVdc
C3	refer to the Cout in Table 1	
C1, C2	4.7 µF / 25 V	4.7 µF / 25 V
LDM	6.8 µH	6.8 µH

REVISION HISTORY

rev.	description	date
1.0	initial release	05/10/2019
1.01	safeties updated in features and safety line, packaging removed	01/14/2021
1.02	model table updated	03/29/2021
1.03	product image updated	04/20/2021
1.04	derating curve and circuits updated	06/29/2021
1.05	CE removed	11/16/2022

The revision history provided is for informational purposes only and is believed to be accurate.

CUI INC
a bel group

Headquarters
20050 SW 112th Ave.
Tualatin, OR 97062
800.275.4899

Fax 503.612.2383
cui.com
techsupport@cui.com

CUI offers a two (2) year limited warranty. Complete warranty information is listed on our website.

CUI reserves the right to make changes to the product at any time without notice. Information provided by CUI is believed to be accurate and reliable. However, no responsibility is assumed by CUI for its use, nor for any infringements of patents or other rights of third parties which may result from its use.

CUI products are not authorized or warranted for use as critical components in equipment that requires an extremely high level of reliability. A critical component is any component of a life support device or system whose failure to perform can be reasonably expected to cause the failure of the life support device or system, or to affect its safety or effectiveness.