CUI INC
a bel group

SERIES: PRC60W | **DESCRIPTION:** DC-DC CONVERTER

FEATURES

- 60 W continuous power
- single regulated outputs
- 4:1 input range, 40~160 Vdc
- meets EN 50155, EN 45545-2
- wide operating temperature range (-40 ~ +105°C)
- short circuit, over current, over temperature, and over voltage protection
- remote on/off, output voltage trim

MODEL

MODEL	input voltage		output voltage	output current[1]	output power	ripple & noise[2]	efficiency[3]
	typ (Vdc)	**range** (Vdc)	(Vdc)	**max** (A)	**max** (W)	**max** (mVp-p)	**typ** (%)
PRC60W-110-S5	110	40 ~ 160	5	12	60	100	89
PRC60W-110-S12	110	40 ~ 160	12	5	60	150	90
PRC60W-110-S24	110	40 ~ 160	24	2.5	60	150	90
PRC60W-110-S48	110	40 ~ 160	48	1.25	60	200	88.5

Notes:
1. At full load.
2. Measured with 20MHz bandwidth and 47μF ceramic capacitor for 5V & 12V models and 10μF ceramic capacitor for 24V & 48V models.
3. The efficiency is test by nominal input and full load at 25°C.

PART NUMBER KEY

PRC60W - 110 - S XX

Base Number | Input Voltage | Output S = single | Output Voltage

INPUT

parameter	conditions/description	min	typ	max	units
operating input voltage		40		160	Vdc
surge voltage	1 second max			200	Vdc
input undervoltage lockout	0% ~ 100% load		34		Vdc
no load input current	at no load			10	mA
input filter	Pi filter				
start-up time	at nominal input, full load			50	ms
start-up voltage	0% ~ 100% load			40	Vdc
CTRL	module on: CTRL pin open or pulled high (3~12 Vdc) module off: CTRL pin pulled low to GND (0~1.2 Vdc)				

OUTPUT

parameter	conditions/description	min	typ	max	units
maximum capacitive load	5 Vdc output 12 Vdc output 24 Vdc output 48 Vdc output			28,000 5,850 2,000 390	µF µF µF µF
voltage accuracy	at full load, nominal input		±1		%
line regulation	low line to high line at full load		±0.2		%
load regulation	0% ~ 100% load		±0.5		%
operating frequency	at full load, nominal input		250		kHz

PROTECTIONS

parameter	conditions/description	min	typ	max	units
over voltage protection	zener diode clamp 5 Vdc output model 12 Vdc output model 24 Vdc output model 48 Vdc output model	 5.6 13.4 26.9 53.8		 8.0 19.2 38.4 76.8	 Vdc Vdc Vdc Vdc
over current protection		130	175	210	%
short circuit protection	continuous, auto recovery				
over temperature protection				115	°C

SAFETY AND COMPLIANCE

parameter	conditions/description	min	typ	max	units
isolation voltage	input to output, for 1 minute	3,000			Vdc
isolation resistance	at 500 Vdc	1,000			MΩ
isolation capacitance			1,500		pF
safety approvals	certified to 62368-1: EN designed to meet 45545-2: EN				
EMI/EMC	EN 55032, EN 55011 CLASS A/ B (with external components, see figures 2 & 3)				
ESD	EN 61000-4-2, Air ± 8kV Contact ± 6kV, perf. Criteria A				
surge	EN 61000-4-5, ±2kV, perf. Criteria A				
conducted immunity	EN 61000-4-6, 10 Vrms, perf. Criteria A				
MTBF	at 25°C		205,000		hours
RoHS	yes				

ENVIRONMENTAL

parameter	conditions/description	min	typ	max	units
operating temperature	see derating curve	-40		105	°C
storage temperature		-55		125	°C
humidity	non-condensing	5		95	%
max. case temperature				110	°C

MECHANICAL

parameter	conditions/description	min	typ	max	units
dimensions	50.80 x 25.40 x 10.50				mm
weight			45		g
case material	metal case				
potting material	silicone (UL94V-0)				

MECHANICAL DRAWING

units: mm
general tolerance: ±0.35mm

PIN CONNECTION	
PIN	FUNCTION
1	+Vin
2	-Vin
3	CTRL
4	+Vout
5	-Vout
6	trim

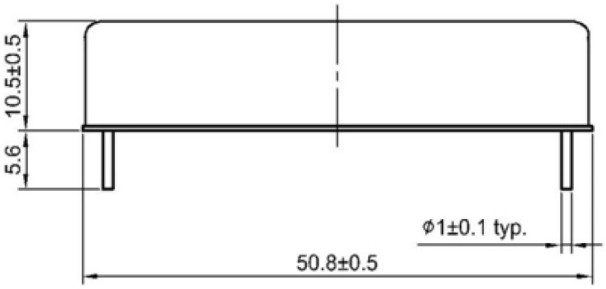

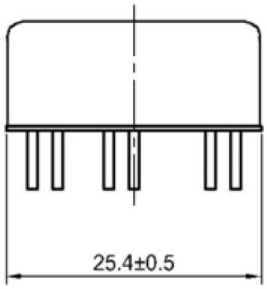

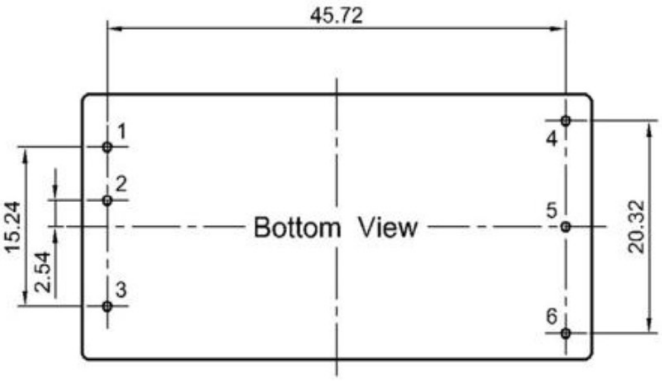

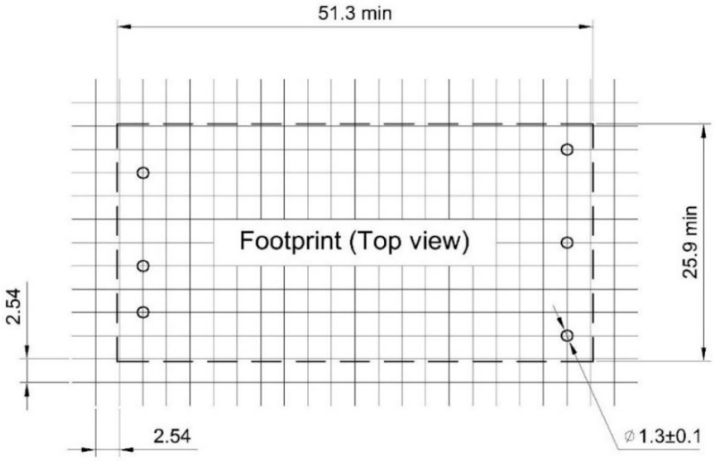

DERATING CURVE

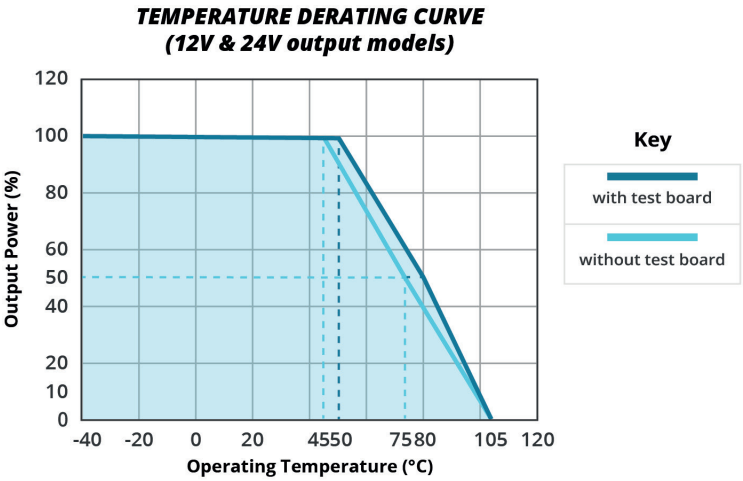

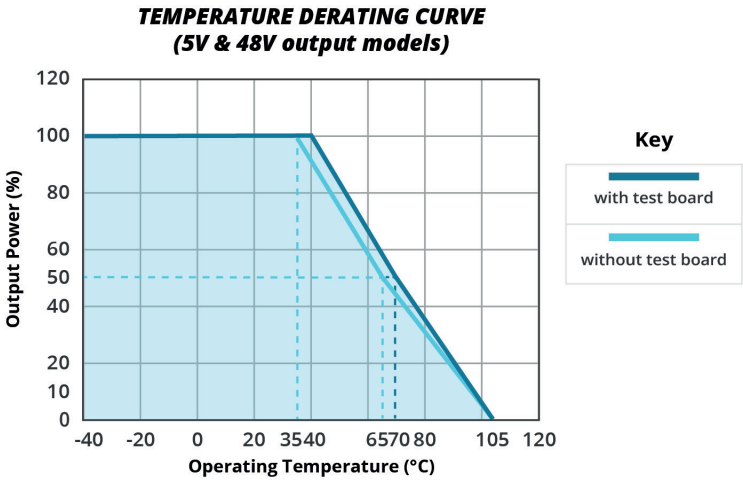

The derating curve was measured at nominal Vin in chamber with natural convection.

The derating curve was measured with nominal line. Mounted test board.

RIPPLE AND NOISE MEASURE METHOD

Figure 1

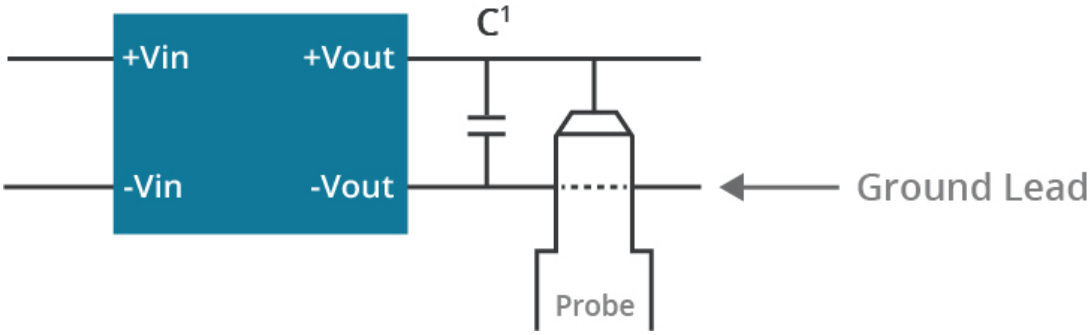

Note: 1. Ripple and noise for 5V & 12V models is measured with 20MHz bandwidth, 15~100% and 47μF ceramic capacitor and for 24V & 48V models with 47μF ceramic capacitor.

EMI RECOMMENDED CIRCUIT

Figure 2
EN55032 CLASS A

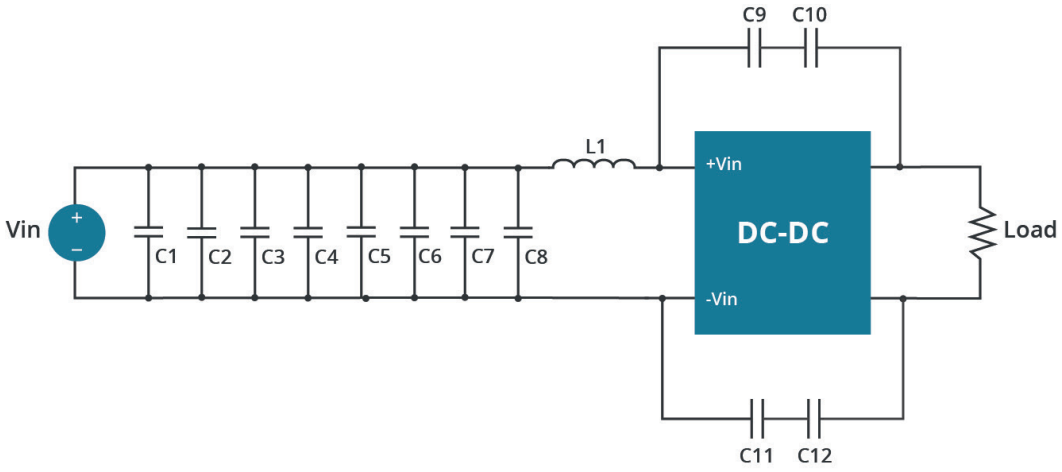

Table 2

Vin	110V
L1	68µH
C1	0.68µF
C2	0.68µF
C3	0.68µF
C4	0.68µF
C5	0.68µF
C6	0.68µF
C7	0.68µF
C8	0.68µF
C9	4,700pF
C10	4,700pF
C11	4,700pF
C12	4,700pF

Figure 3
EN55032 CLASS B

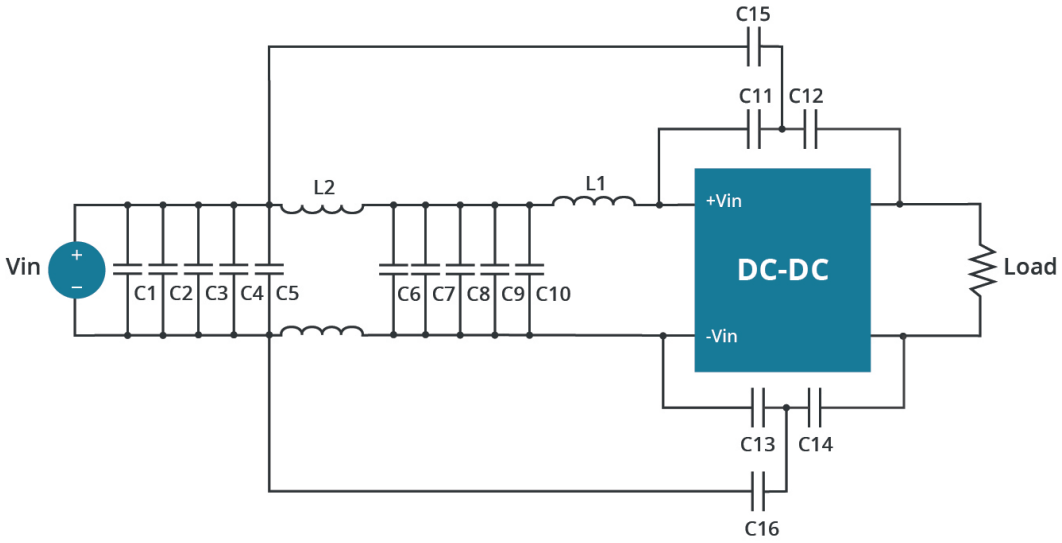

Table 2

Vout	5V, 12V	24V, 48V
L1	68µF	68µH
L2	2.2µF	2.2µF
C1	0.68µF	0.68µF
C2	0.68µF	0.68µF
C3	0.68µF	0.68µF
C4	0.68µF	0.68µF
C5	0.68µF	0.68µF
C6	0.68µF	0.68µF
C7	0.68µF	0.68µF
C8	0.68µF	0.68µF
C9	0.68µF	0.68µF
C10	0.68µF	0.68µF
C11	4,700pF	4,700pF
C12	4,700pF	4,700pF
C13	4,700pF	4,700pF
C14	4,700pF	4,700pF
C15	47pF	33pF
C16	47pF	33pF

APPLICATION NOTES

Figure 4

Trim up

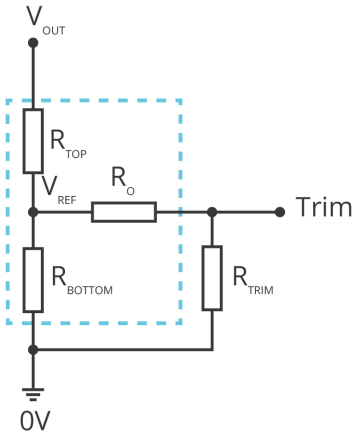

$$R_{TRIM} = \frac{a \cdot R_{BOTTOM}}{R_{BOTTOM} - a} - R_O \qquad a = \frac{V_{REF}}{V_{OUT} - V_{REF}} \cdot R_{TOP}$$

Formula for Trim up

Trim down

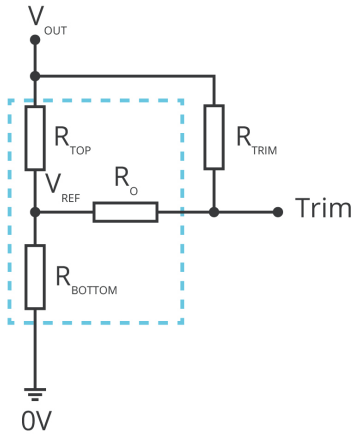

$$R_{TRIM} = \frac{a \cdot R_{TOP}}{R_{TOP} - a} - R_O \qquad a = \frac{V_{OUT} - V_{REF}}{V_{REF}} \cdot R_{BOTTOM}$$

Formula for Trim down

Table 4

V_{NOM}	R_{TOP}	R_{BOTTOM}	R_O	V_{REF}
(Vdc)	(kΩ)	(kΩ)	(kΩ)	(V)
5	15.47	5.1	30.0	1.24
12	38.0	10.0	68.0	2.50
24	86.0	10.0	76.8	2.50
48	182.0	10.0	80.6	2.50

Note: Value for R_{TOP}, R_{BOTTOM}, R_O, and V_{REF} refer to Table 4 (fixed internal values).
R_{TRIM}: Trim resistance
a: User-defined parameter, no actual meanings
V_{NOM}: Nominal output voltage
V_{OUT}: Target output voltage

REVISION HISTORY

rev.	description	date
1.0	initial release	11/01/2023

The revision history provided is for informational purposes only and is believed to be accurate.

CUI INC
a bel group

Headquarters
20050 SW 112th Ave.
Tualatin, OR 97062
800.275.4899

Fax 503.612.2383
cui.com
techsupport@cui.com

CUI offers a two (2) year limited warranty. Complete warranty information is listed on our website.

CUI reserves the right to make changes to the product at any time without notice. Information provided by CUI is believed to be accurate and reliable. However, no responsibility is assumed by CUI for its use, nor for any infringements of patents or other rights of third parties which may result from its use.

CUI products are not authorized or warranted for use as critical components in equipment that requires an extremely high level of reliability. A critical component is any component of a life support device or system whose failure to perform can be reasonably expected to cause the failure of the life support device or system, or to affect its safety or effectiveness.