CUI INC
a bel group

SERIES: PRD25 | DESCRIPTION: DC-DC CONVERTER

FEATURES

- up to 25 W isolated output
- industry standard 1" x 1" package
- 2:1 input range
- low ripple & noise
- over voltage, over current, short circuit, and over temperature protections
- remote on/off control
- output trim
- -40 to 85°C temperature range
- efficiency up to 91%
- UL/cUL safety approval

MODEL

	input voltage		output voltage	output current		output power	ripple & noise[1]	efficiency
	typ (Vdc)	range (Vdc)	(Vdc)	min (A)	max (A)	max (W)	max (mVp-p)	typ (%)
PRD25-D48-S3	48	36~75	3.3	0.75	7.5	25	80	89.5
PRD25-D48-S5	48	36~75	5	0	5	25	80	91
PRD25-D48-S12	48	36~75	12	0	2.1	25.2	120	87.5

Notes: 1. At full load, nominal input, 20 MHz bandwidth oscilloscope, input terminated with a 4.7 µF capacitor. Output terminated with 1 µF and 10 µF low ESR capacitors.
2. All specifications are measured at Ta=25°C, nominal input voltage, and rated output load unless otherwise specified. All models are tested and specified with a 4.7 µF on the input, and with 1 µF and 10 µF low ESR capacitors on the output.

PART NUMBER KEY

PRD25 - DXX - SXX - X - X - X

- Base Number
- Input Voltage
- Output Voltage
- Remote On/Off Control:
  P = positive logic
  N = negative logic
- Packaging Style:
  D = DIP
  M = SMT
- Package Options:
  "blank" = standard (through hole models only)
  TR = Tape & Reel (SMT models only)

DISCONTINUED

DISCONTINUED

INPUT

parameter	conditions/description		min	typ	max	units
operating input voltage			36	48	75	Vdc
current	at nominal Vin 3.3 Vdc output models 5 Vdc output models 12 Vdc output models				 0.81 0.79 0.842	 A A A
start-up voltage	rising input voltage 3.3, 12 Vdc output models 5 Vdc output models		 34 34	 35.2 35	 36 36	 Vdc Vdc
under voltage shutdown	falling input voltage 3.3, 12 Vdc output models 5 Vdc output models		 32 32	 34 33.5	 35.2 34.5	 Vdc Vdc
remote on/off[1]	3.3 Vdc output models					
	positive logic	ON (10~15 Vdc or open circuit)				
		OFF (-0.7~1.2 Vdc)				
	negative logic	ON (-0.7~1.2 Vdc)				
		OFF (10~15 Vdc or open circuit)				
	5, 12 Vdc output models					
	positive logic	ON (10~15 Vdc or open circuit)				
		OFF (-0.7~0.7 Vdc)				
	negative logic	ON (-0.7~0.8 Vdc)				
		OFF (10~15 Vdc or open circuit)				
filter	3.3, 5 Vdc output models: LC filter 12 Vdc output models: capacitance filter					
input reverse polarity protection	no					
input fuse	recommended to add 1.5 A fast blow fuse					

Notes: 1. On/Off current is 1 mA.

OUTPUT

parameter	conditions/description	min	typ	max	units
maximum capacitive load	low ESR <0.02 Ω, full load 3.3, 5 Vdc output models 12 Vdc output models			 2,000 470	 μF μF
line regulation	50% load, input voltage from low to high 3.3, 5 Vdc output models 12 Vdc output models			 ±0.1 ±0.075	 % %
load regulation	at nominal Vin, 0~100% load 3.3, 5 Vdc output models 12 Vdc output models			 ±0.2 ±0.05	 % %
voltage accuracy	at 50% load		±1		%
start-up time				50	ms
adjustability	see application notes		±10		%
switching frequency	3.3, 5 Vdc output models 12 Vdc output models	300 295	330 325	360 355	kHz kHz
dynamic load response	50-75-50% load change to 2% Vout 3.3 Vdc output models 5 Vdc output models		 180 200	 250	 μs μs
	50-75-50% load change to 1% Vout 12 Vdc output models		 100	 200	 μs
temperature coefficient			±0.02		%/°C

PROTECTIONS

parameter	conditions/description	min	typ	max	units
over voltage protection	via magnetic feedback 3.3 Vdc output models 5 Vdc output models 12 Vdc output models	 4.2 6 14	 5 6.5 19	 5.7 7.5 22	 Vdc Vdc Vdc
over current protection	current limiting 3.3 Vdc output models 5 Vdc output models 12 Vdc output models	 8.5 5.3 2.3	 10 6.8 3	 11 7.3 3.4	 A A A
short circuit protection	current limiting, hiccup auto restart		0.3		A
over temperature protection	3.3, 5 Vdc output models 12 Vdc output models	110 130	115 135	120 150	°C °C

SAFETY AND COMPLIANCE

parameter	conditions/description	min	typ	max	units
isolation voltage	input to output, continuous, basic insulation	2,250			Vdc
isolation resistance		10			MΩ
isolation capacitance	3.3 Vdc output models 5 Vdc output models 12 Vdc output models		1,000 2,000 1,700		pF pF pF
safety approvals	UL 60950-1, 2nd Edition				
LVD	2006/95/EC (CE mark)				
conducted emissions[1]	EN55022/CISPR22, Class B (external circuit required, see Figure 3)				
radiated emissions[1]	EN55022/CISPR22, Class B (external circuit required, see Figure 3)				
MTBF	as per Telcordia SR-332 Method 1, Case 3, ground fixed conditions, Ta=40°C	2,000,000			hours
RoHS	2011/65/EU				

Notes: 1. Layout and the environment play an influential role with the filter's performance. Performance will depend on the user's PCB layout, the chassis shielding environment, choice of external components, and other circuits present.

ENVIRONMENTAL

parameter	conditions/description	min	typ	max	units
operating temperature	see derating curves	-40		85	°C
storage temperature		-55		125	°C
operating humidity	non-condensing	10		90	%
altitude	derates 1% /1000 ft	-500 -152		10,000 3048	ft m

DISCONTINUED

SOLDERABILITY

parameter	conditions/description	min	typ	max	units
wave soldering	for Sn/Ag/Cu based solders (for through hole models): preheat temperature solder pot temperature solder dwell time			 115 270 7	 °C °C s
reflow soldering	reflow solder profile below is suitable for SAC305 type lead-free solders (for surface mount models)		245	260	°C

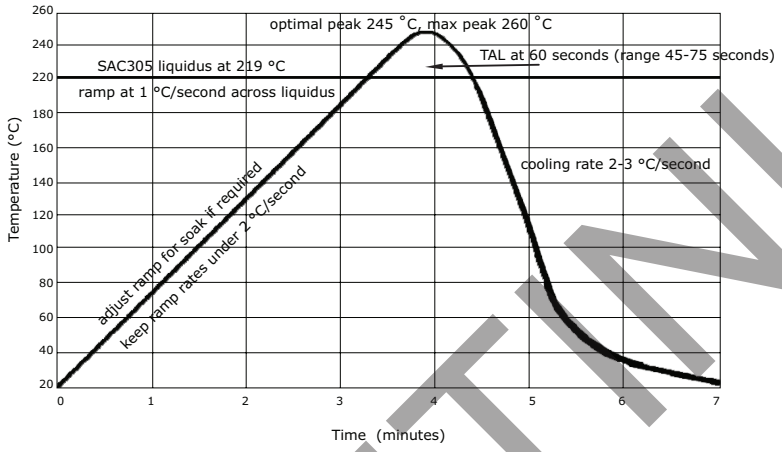

MECHANICAL

parameter	conditions/description	min	typ	max	units
dimensions	through hole: 1.10 x 0.96 x 0.33 [27.9 x 24.4 x 8.4 mm] surface mount: 1.10 x 0.96 x 0.33 [27.9 x 24.4 x 8.4 mm]				inches inches
weight			9.07		g

DISCONTINUED

MECHANICAL DRAWING (THROUGH HOLE)

units: inches [mm]
tolerance: X.XX ±0.02 [0.5]
X.XXX ±0.010 [0.25]

PIN CONNECTIONS	
PIN	Function
1	+Vin
2	-Vin
3	+Vout
4	output trim
5	-Vout
6	on/off control

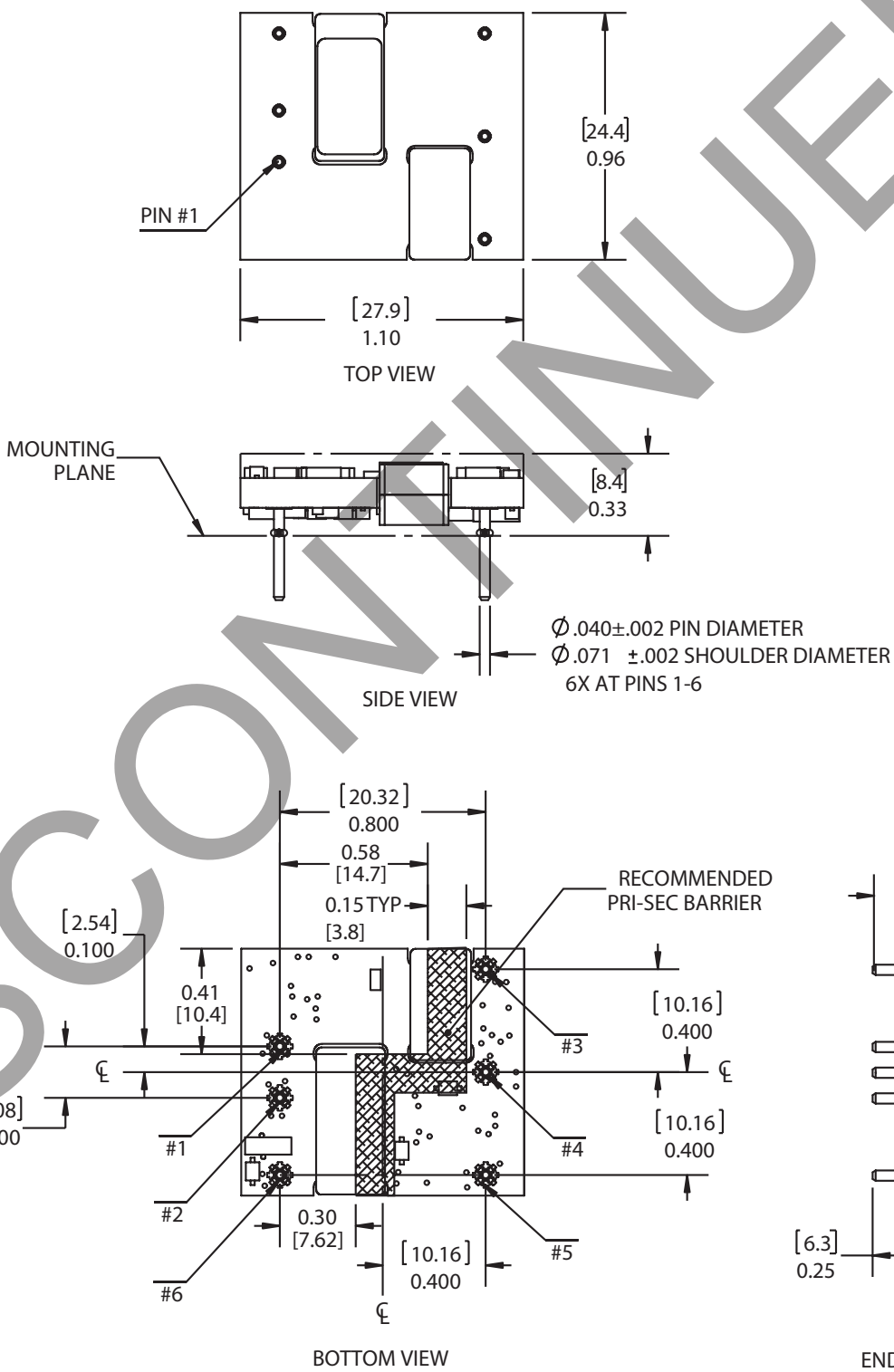

DISCONTINUED

MECHANICAL DRAWING (SURFACE MOUNT)

units: inches [mm]
tolerance: X.XX ±0.02 [0.5]
X.XXX ±0.010 [0.25]

PIN CONNECTIONS	
PIN	Function
1	+Vin
2	-Vin
3	+Vout
4	output trim
5	-Vout
6	on/off control

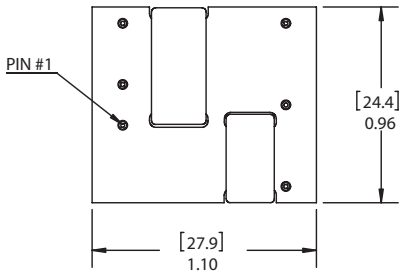

TOP VIEW

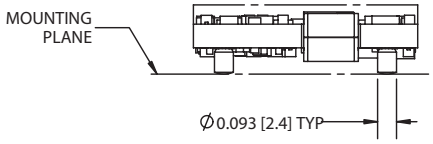

SIDE VIEW

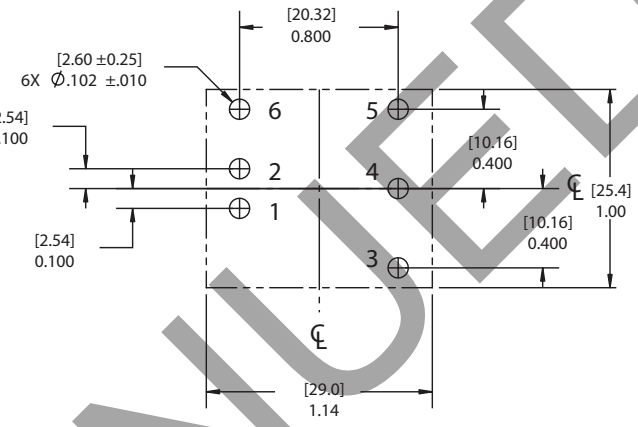

RECOMMENDED PCB LAYOUT
TOP VIEW

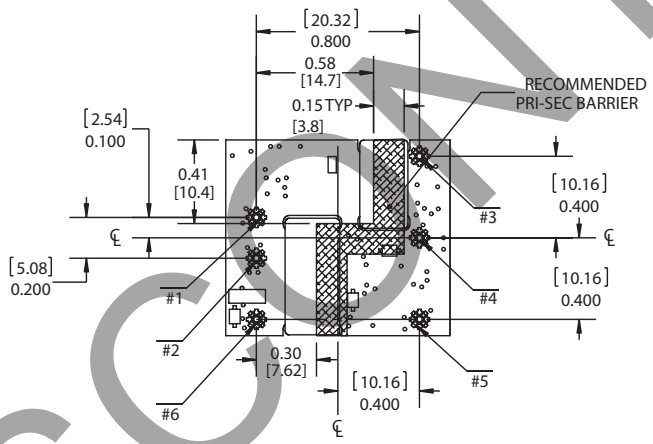

BOTTOM VIEW

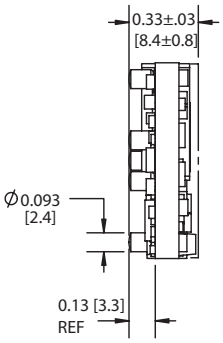

END VIEW

DISCONTINUED

DERATING CURVES

PRD25-D48-S3 Derating Curves @ Sea Level
(airflow from input to output)

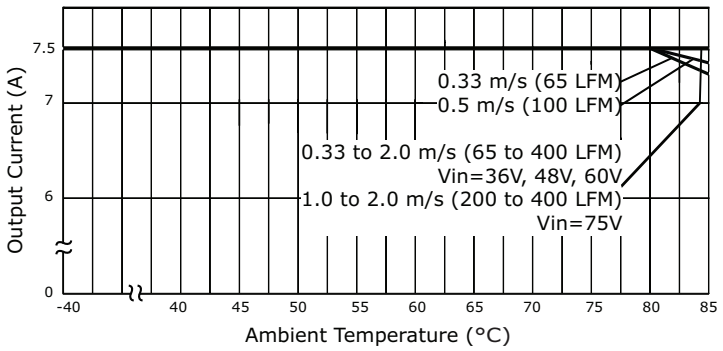

PRD25-D48-S5 Derating Curves @ Sea Level
(airflow from input to output)

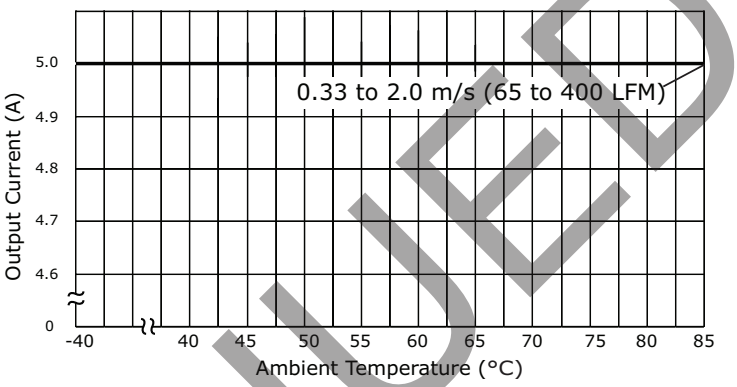

PRD25-D48-S12 Derating Curves @ Sea Level
(Vin=36V, airflow from input to output)

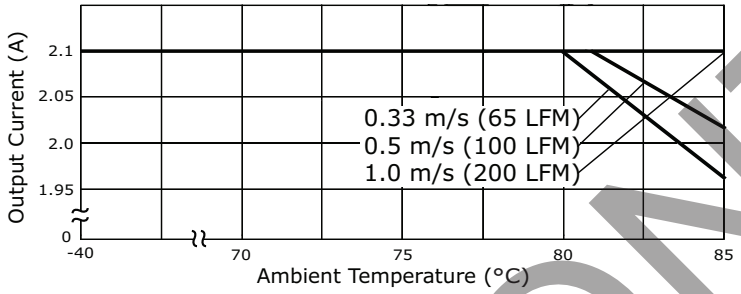

PRD25-D48-S12 Derating Curves @ Sea Level
(Vin=48V, airflow from input to output)

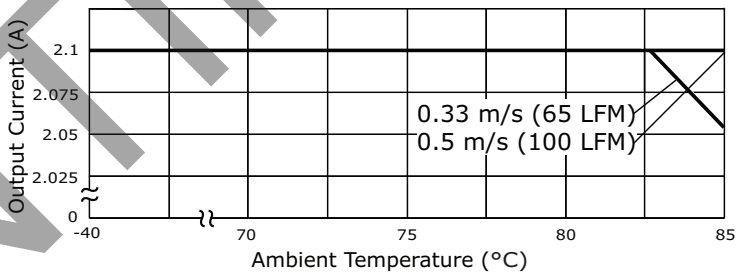

PRD25-D48-S12 Derating Curves @ Sea Level
(Vin=60V, airflow from input to output)

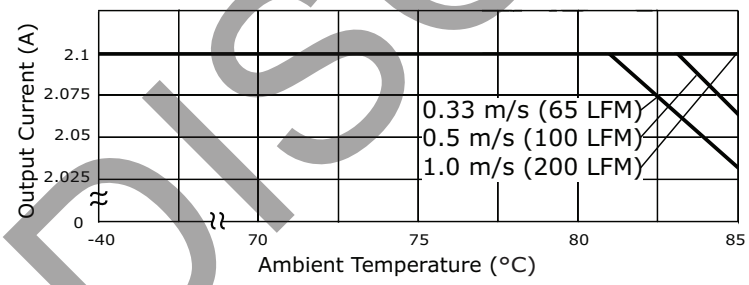

PRD25-D48-S12 Derating Curves @ Sea Level
(Vin=75V, airflow from input to output)

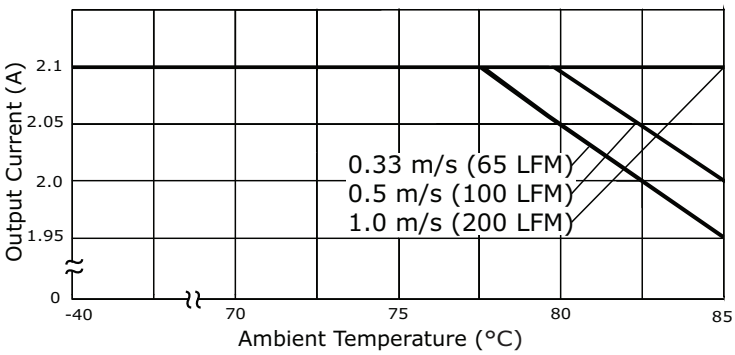

DISCONTINUED

EFFICIENCY CURVES

PRD25-D48-S3 Efficiency Curve
(Efficiency vs. Line Voltage and Load Current @ 25°C)

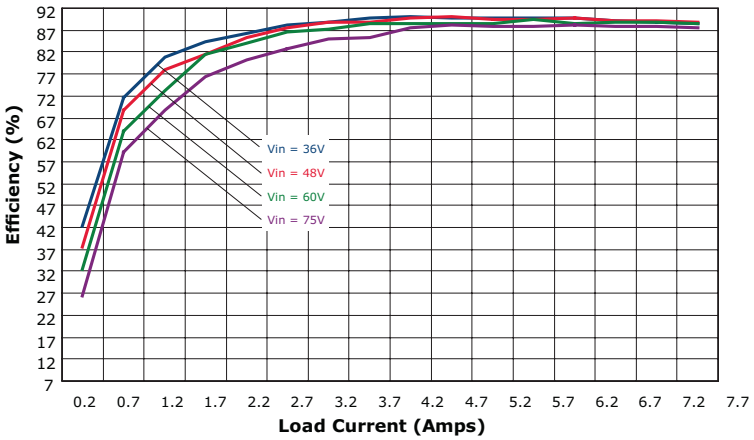

PRD25-D48-S5 Efficiency Curve
(Efficiency vs. Line Voltage and Load Current @ 25°C)

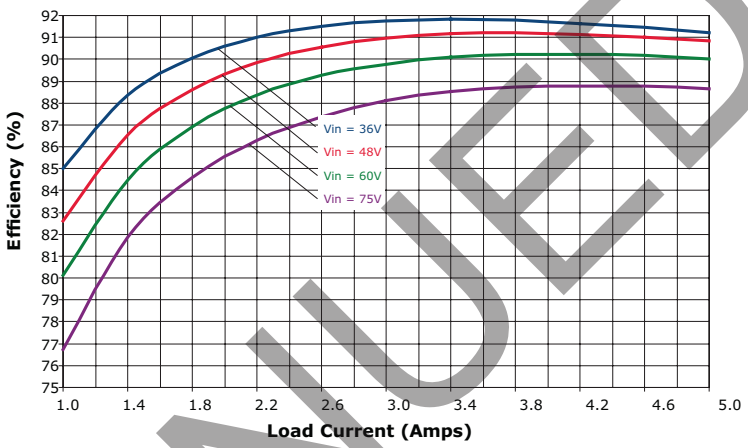

PRD25-D48-S12 Efficiency Curve
(Efficiency vs. Line Voltage and Load Current @ 25°C)

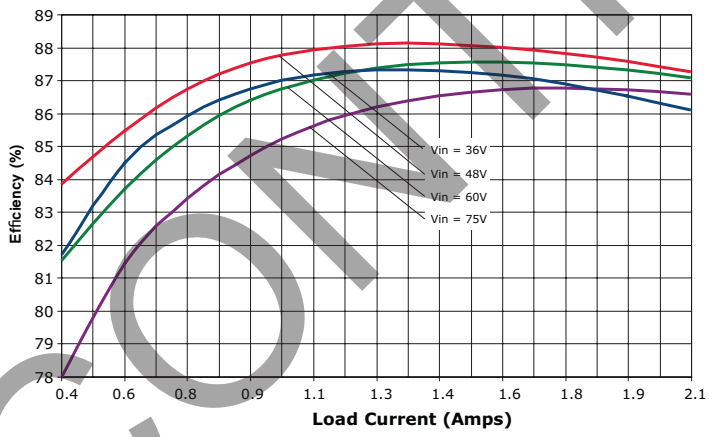

DISCONTINUED

PACKAGING (THROUGH HOLE)

units: mm [inches]
tolerance: +1/-0 mm

Tray Material: Dow 220 anti-static ethafoam
Tray Size: 252 x 252 x 19.1 mm
QTY: 30 pcs per tray (6 x 5)

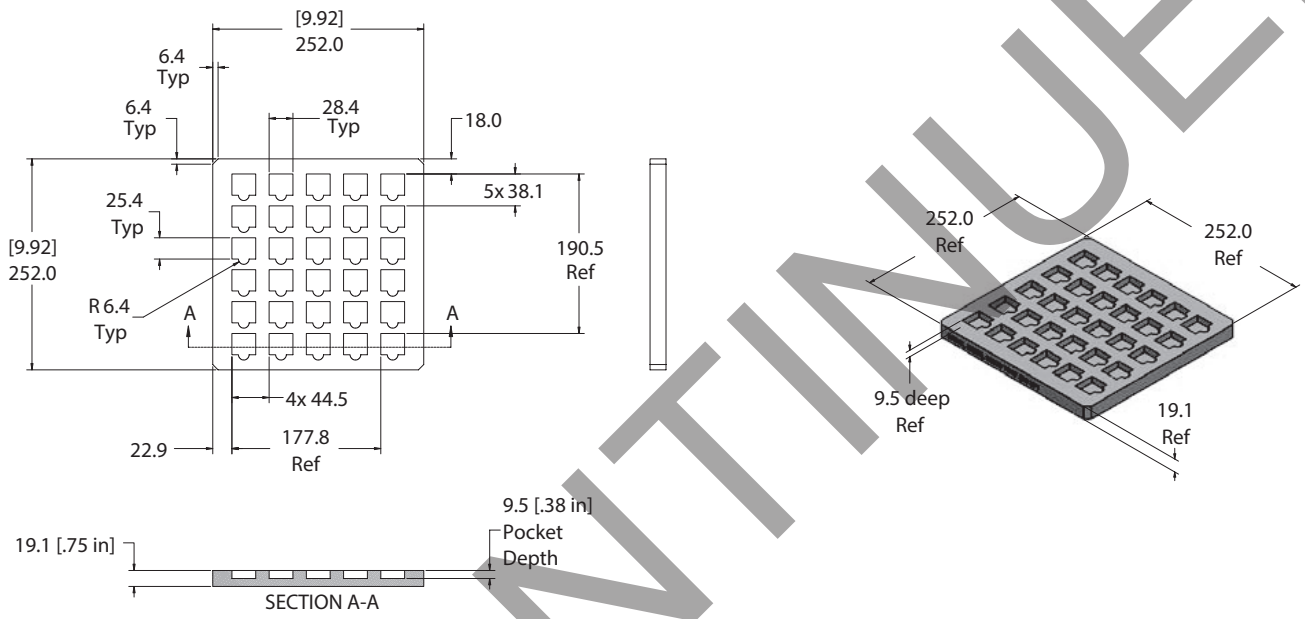

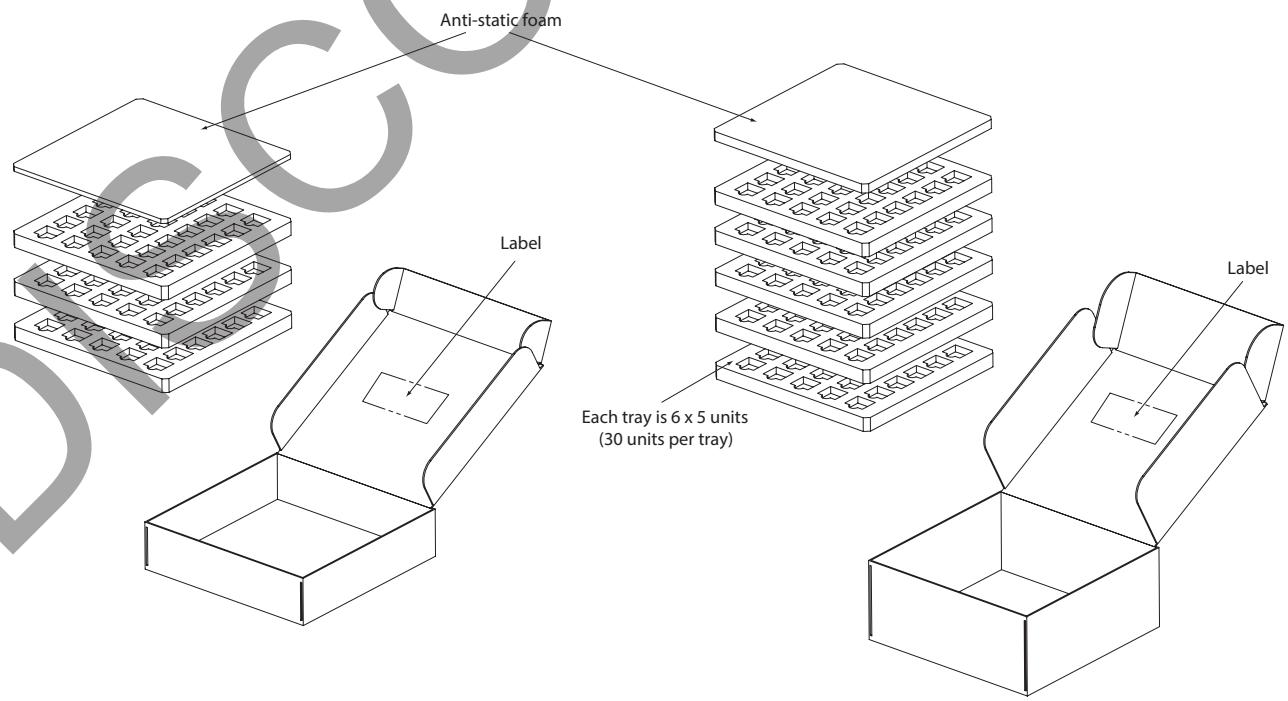

DISCONTINUED

PACKAGING (SURFACE MOUNT)

units: inches [mm]

Tape & Reel: Conforms to EIA-481
Reel Size: Ø13”
QTY: 100 pcs per reel
Note: The SMT package has an MSL 2 rating

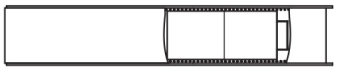

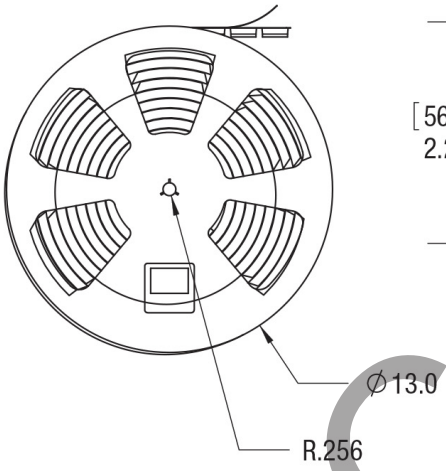

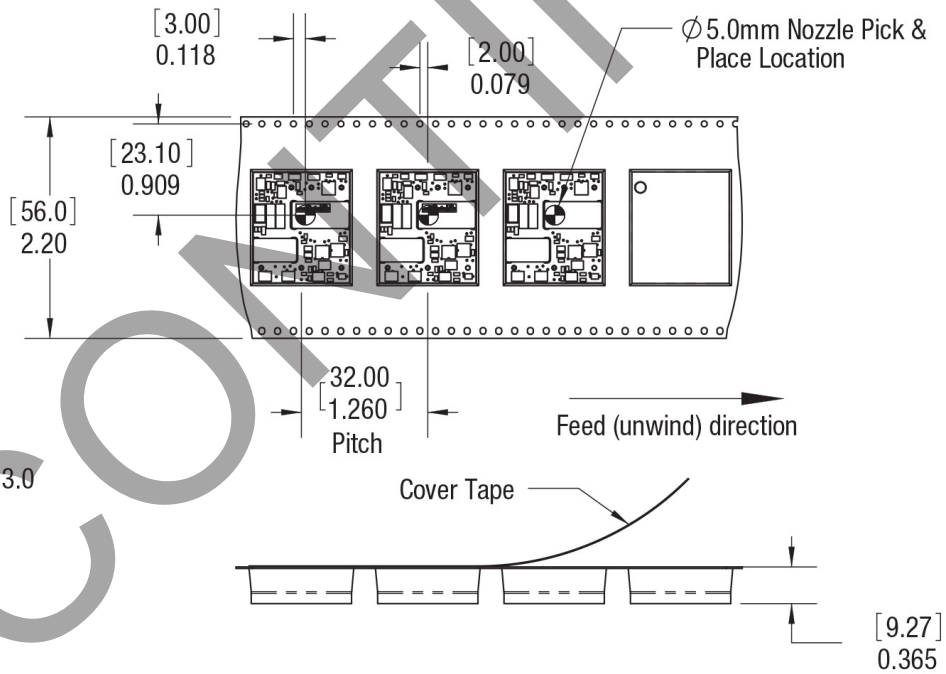

DISCONTINUED

TEST CONFIGURATIONS

Input Ripple Current & Output Noise

All models are tested and specified for input reflected ripple current and output noise as per layouts shown in Figures 1 & 2. The Cbus and Lbus components simulate a typical DC voltage bus. However, your specific system configuration may require additional considerations.

Figure 1 Measuring Input Ripple Current

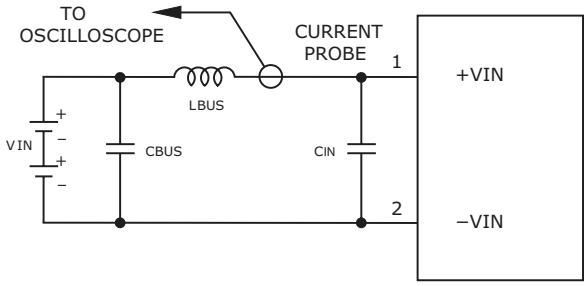

Figure 2 Measuring Output Ripple and noise (PARD)

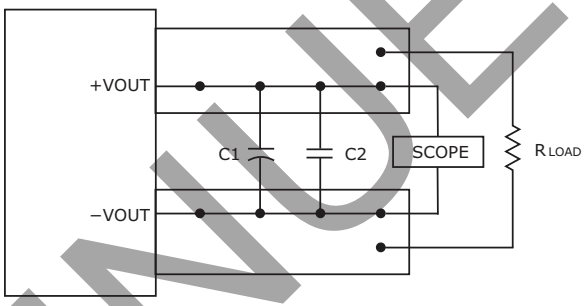

Table 1

C_{IN}	33µF, ESR < 700mΩ @ 100kHz
C_{BUS}	220µF, ESR < 100mΩ @ 100kHz
L_{BUS}	12µH

Table 2

C1	1µF
C2	10µF
load 2-3 inches (51-76mm) from module	

EMC RECOMMENDED CIRCUIT

Figure 3 Conducted Emissions Test Circuit

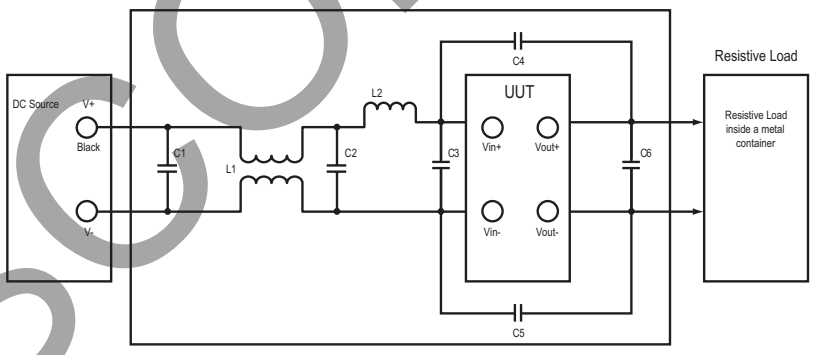

Table 3

Recommended External Circuit Components	
L1	1 mH, 6 A
L2	4.7 µH, 3.6 A
C1, C2	Electrolytic Capacitor 22 µfd, 100 V
C3	Qty. 2 - Electrolytic Capacitor 22 µfd, 100 V
C4, C5	3.3 nF, 1500 V
C6	Electrolytic Capacitor 22 µfd, 100 V

DISCONTINUED

APPLICATION NOTES

Output Voltage Trimming

The output voltage can be adjusted by using the trim pin and a single fixed resistor (see Figures 4 & 5). Trimming resistors should have a low temperature coefficient (± 100 ppm/°C or less) and be mounted close to the converter. If the trim function is not needed, leave the trim pin open.

Figure 4 Trim Adjustments To Decrease Output Voltage Using A Fixed Resistor

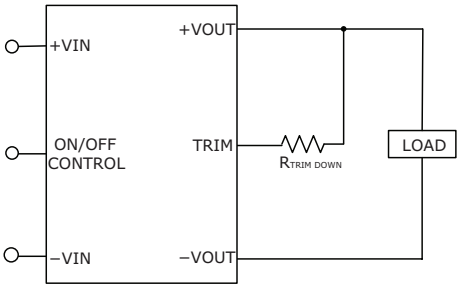

Figure 5 Trim Adjustments To Increase Output Voltage Using A Fixed Resistor

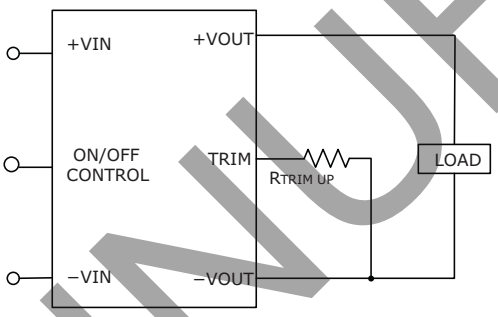

$$Rtrim\text{ - }up = \frac{A}{V_o - V_{o,\,nom}} - B$$

$$Rtrim\text{ - }down = \frac{C(V_o - 2.5)}{V_{o,\,nom} - V_o} - B$$

Note: $R_{trim\text{-}up}$ is the external resistor in Ω
$R_{trim\text{-}down}$ is the external resistor in Ω
$V_{O,\,nom}$ is the nominal output voltage
V_o is the desired output voltage

Vout	A	B	C
3.3	12775	2050	5110
5	12775	2050	5110
12	25000	5110	10000

Remote On/Off Control

The DC-DC converter can be ordered with either positive or negative logic. See page 2 for enable/disable details for both positive and negative logic options. Dynamic control of the On/Off function should be able to sink appropriate signal current when brought low and withstand appropriate voltage when brought high. Be aware that there is a finite time in milliseconds between the the time of On/Off control activation and stable, regulated output. This time will vary slightly with output load type and current and input conditions.

Cautions when using the On/Off control:

1. To retain full output circuit isolation, control the On/Off from the input side only.
2. While it is possible to control the On/Off with external logic if you carefully observe the voltage levels, the preferred circuit is either an open drain/open collector transistor, a switch, or a relay.
3. Do not apply voltages to the On/Off pin when there is no input power voltage, otherwise the converter may be permanently damaged.

Figure 6. Driving The On/Off Control Pin (Suggested Circuit)

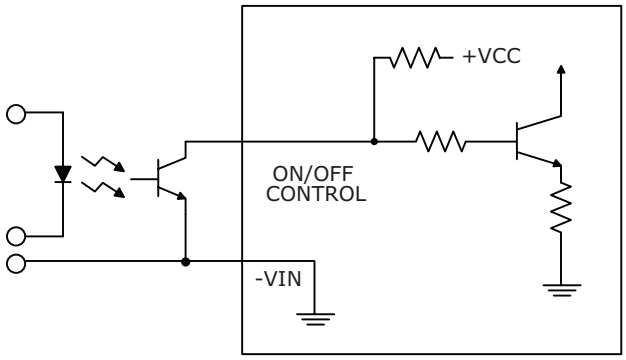

DISCONTINUED

REVISION HISTORY

rev.	description	date
1.0	initial release	05/20/2016
1.01	company logo update	10/26/2020

The revision history provided is for informational purposes only and is believed to be accurate.

DISCONTINUED

CUI INC
a bel group

Headquarters
20050 SW 112th Ave.
Tualatin, OR 97062
800.275.4899

Fax 503.612.2383
cui.com
techsupport@cui.com

CUI offers a two (2) year limited warranty. Complete warranty information is listed on our website.

CUI reserves the right to make changes to the product at any time without notice. Information provided by CUI is believed to be accurate and reliable. However, no responsibility is assumed by CUI for its use, nor for any infringements of patents or other rights of third parties which may result from its use.

CUI products are not authorized or warranted for use as critical components in equipment that requires an extremely high level of reliability. A critical component is any component of a life support device or system whose failure to perform can be reasonably expected to cause the failure of the life support device or system, or to affect its safety or effectiveness.