CUI INC
a bel group

SERIES: VXO78-500-M | **DESCRIPTION:** NON-ISOLATED DC SWITCHING REGULATOR

FEATURES

- ultra-thin SMD Package, thickness ≤3.5 mm
- open frame
- high efficiency up to 95%
- no-load input current as low as 0.2 mA
- wide temperature range: -40°C ~ +85°C
- output short-circuit protection

RoHS

MODEL

MODEL	input voltage[1] typ (Vdc)	input voltage[1] range (Vdc)	output voltage (Vdc)	output current max (mA)	output power max (W)	ripple & noise[2] max (mVp-p)	efficiency[3] typ (%)
VXO7803-500-M	24	4.75~36	3.3	500	1.65	50	86
VXO7805-500-M	24	6.5~36	5	500	2.5	50	90
VXO7809-500-M	24	12~36	9	500	4.5	50	93
VXO78012-500-M	24	15~36	12	500	6	50	94
VXO78015-500-M	24	19~36	15	500	7.5	50	95

Notes:
1. For input voltages higher than 30 Vdc, a 22 μF / 50 V input capacitor is required.
2. Tested at nominal input, 20~100% load for 3.3 Vdc model, 20 MHz bandwidth, with 10 μF electrolytic and 1 μF ceramic capacitor on the output. At loads below 10%, the max ripple and noise of the 3.3 & 5 Vdc outputs will be 150 mVp-p, and the other outputs will be 2% Vo.
3. Measured at min Vin, full load.
4. All specifications are measured at Ta=25°C, humidity < 75%, nominal input voltage, and rated output load unless otherwise specified.

PART NUMBER KEY

VXO78 XXX - 500 - M - TR

- VXO78: Base Number
- XXX: Output Voltage
- 500: Output Current
- TR: Packaging: TR = Tape and reel

INPUT

parameter	conditions/description	min	typ	max	units
operating input voltage[1]	for positive output applications		24	36	Vdc
filter	capacitor filter				
input reverse polarity protection	no				
no-load input current	positive outputs		0.2	1.5	mA
Ctrl*[2]	module on	Ctrl pin open or pulled high (TTL 3.2-8VDC)			
	module off	Ctrl pin pulled low to GND (0-0.8VDC)			
	input current when off		30	100	µA

Note: 1. See Model section on page 1 for specific input voltage ranges.
2. The Ctrl pin voltage is referenced to input GND.

OUTPUT

parameter	conditions/description	min	typ	max	units
maximum capacitive load[3]	for positive output applications			680	µF
voltage accuracy	at full load, input voltage range 3.3 Vdc output model all other models		 ±2 ±2	 ±4 ±3	 % %
line regulation	at full load, input voltage range		±0.2	±0.4	%
load regulation	at nominal input, 10~100% load 3.3 Vdc output model all other models		 ±0.6 ±0.3		 % %
switching frequency	at nominal input voltage, full load		700		kHz
transient recovery time	at nominal input voltage, 25% load step change		0.2	1	ms
transient response deviation	at nominal input voltage, 25% load step change		50	200	mV
temperature coefficient	at full load			±0.03	%/°C

Note: 3. The maximum capacitive load was tested at nominal input voltage, full load.

PROTECTIONS

parameter	conditions/description	min	typ	max	units
short circuit protection	continuous, auto recovery				

SAFETY AND COMPLIANCE

parameter	conditions/description	min	typ	max	units
safety approvals	designed to meet 62368-1: EN, BS EN				
conducted emissions	CISPR32/EN55032 Class B (see Fig. 4-2 for recommended circuit)				
radiated emissions	CISPR32/EN55032 Class B (see Fig. 4-2 for recommended circuit)				
ESD	IEC/EN61000-4-2, contact ± 4kV, perf. Criteria B				
radiated immunity	IEC/EN61000-4-3, 10V/m, perf. Criteria A				
EFT/burst	IEC/EN61000-4-4, ± 1kV (see Fig. 4-1 for recommended circuit), perf. Criteria B				
surge	IEC/EN61000-4-5, line-line ± 1kV (see Fig. 4-1 for recommended circuit), perf. Criteria B				
conducted immunity	IEC/EN61000-4-6, 3 Vr.m.s, perf. Criteria A				
MTBF	as per MIL-HDBK-217F, 25°C	2,000			K hours
RoHS	2011/65/EU				

ENVIRONMENTAL

parameter	conditions/description	min	typ	max	units
operating temperature	see derating curve	-40		85	°C
storage temperature		-55		125	°C
storage humidity	non-condensing	5		95	%

SOLDERABILITY

parameter	conditions/description	min	typ	max	units
reflow soldering	Peak temp. ≤245°C, maximum duration time ≤60s over 217°C. Please refer to IPC/JEDEC J-STD-020D.1			260	°C

MECHANICAL

parameter	conditions/description	min	typ	max	units
dimensions	12.50 x 13.50 x 3.50 [0.492 x 0.531 x 0.138 inch]				mm
weight			0.9		g

MECHANICAL DRAWING

units: mm [inch]
tolerance: ±0.25[±0.010]
pin diameter tolerance: ±0.10[±0.004]

PIN-OUT	
PIN	FUNCTION
1	+Vin
2	GND
3	+Vo
4	Remote on/off

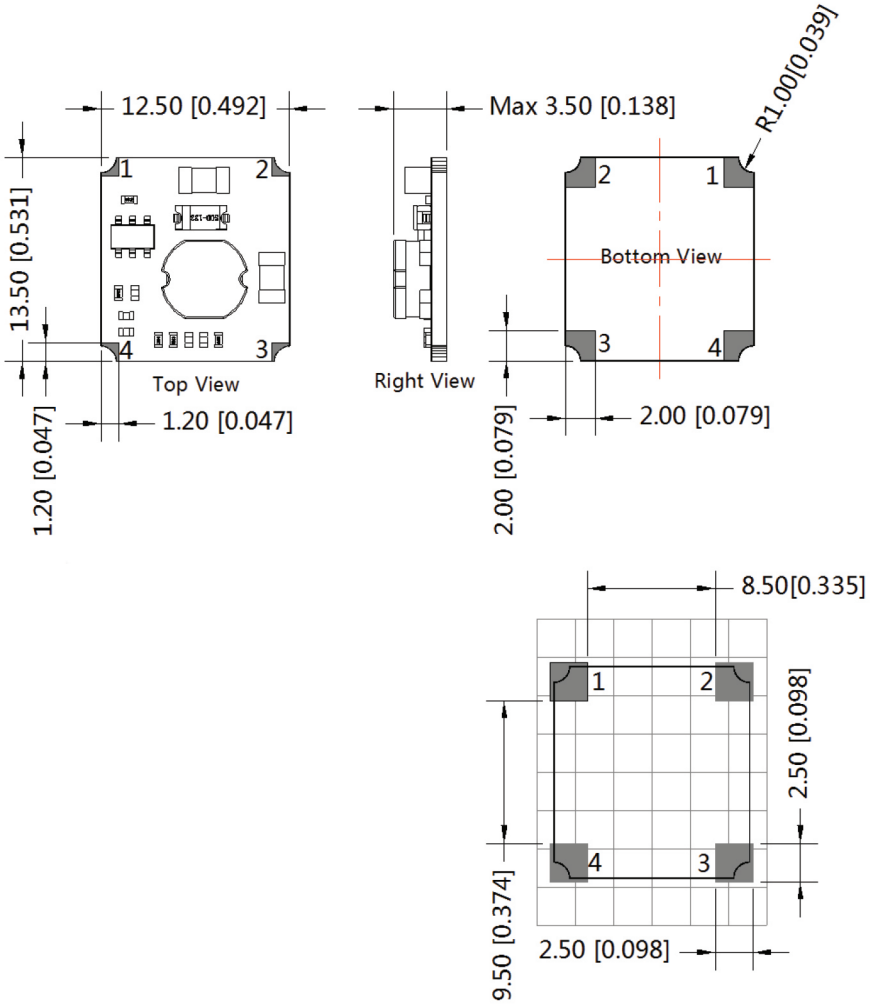

DERATING CURVE

Figure 1

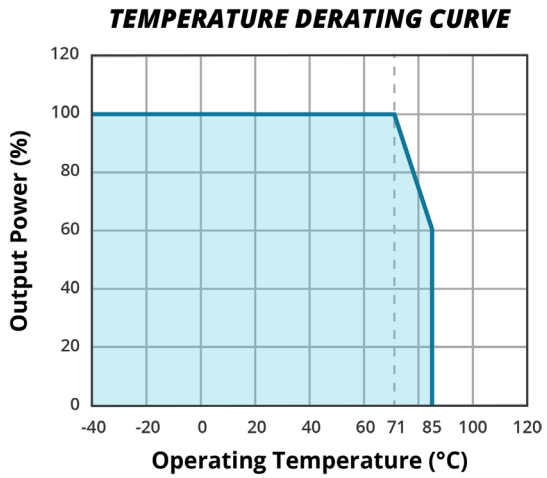

EFFICIENCY CURVES

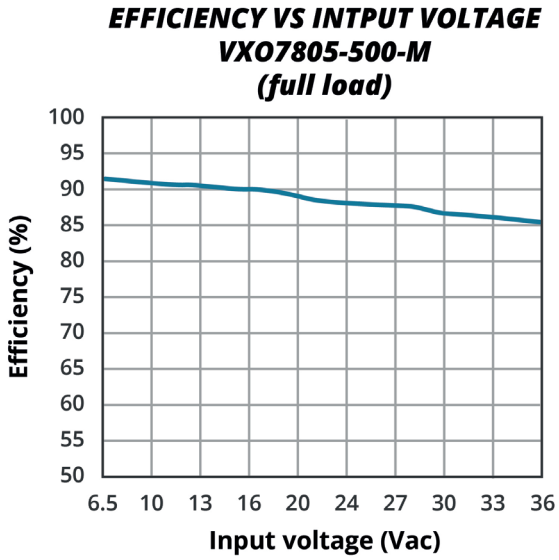

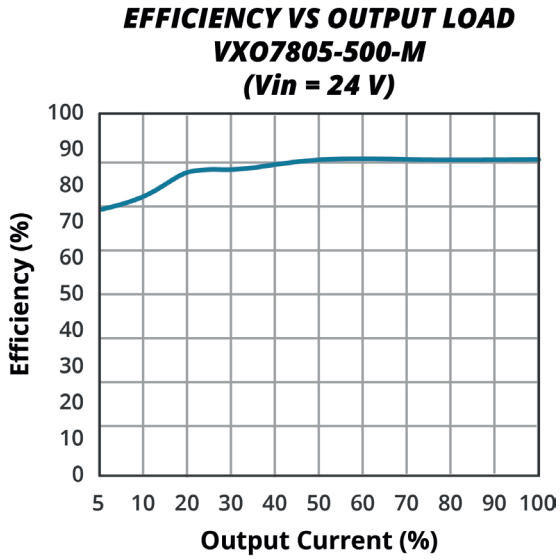

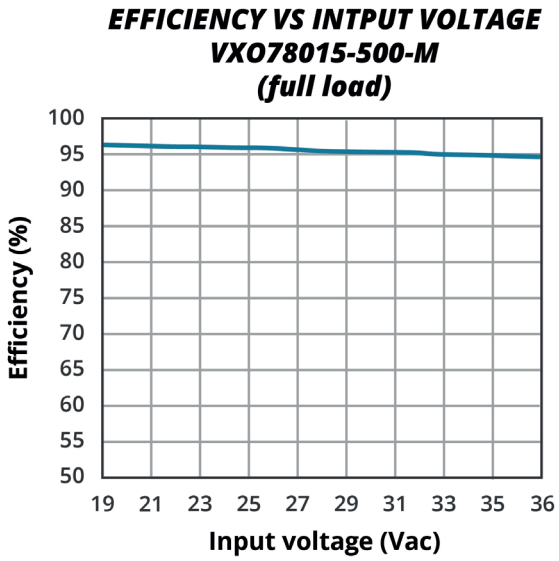

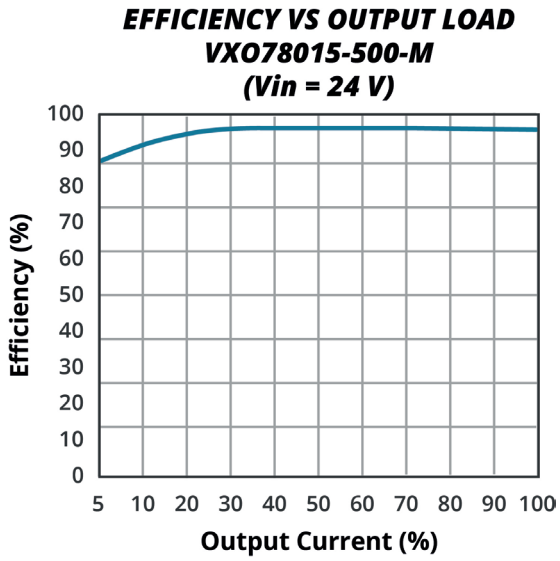

TYPICAL APPLICATION CIRCUIT

Figure 2

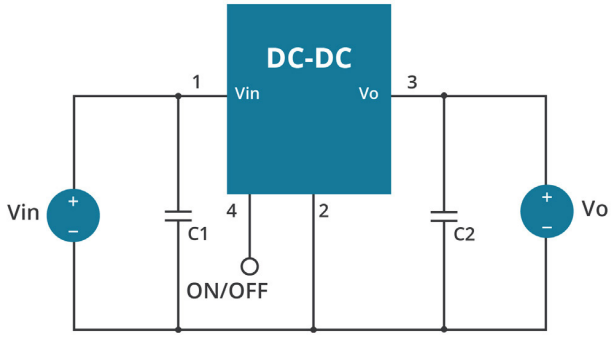

Table 1

External Capacitor Table		
Model Number	C1, C3 (ceramic capacitor)	C2, C4 (ceramic capacitor)
VXO7803-500-M	10 µF/50 V	22 µF/10 V
VXO7805-500-M	10 µF/50 V	22 µF/16 V
VXO7809-500-M	10 µF/50 V	22 µF/25 V
VXO78012-500-M	10 µF/50 V	22 µF/25 V
VXO78015-500-M	10 µF/50 V	22 µF/25 V

Note: 1.C1 and C2 (C3 and C4) are required and should be connected close to the pin terminal of the module.
2.The capacitance of C1 and C2 (C3 and C4) refer to Sheet 1, it can be increased properly if required, and tantalum or low ESR electrolytic capacitors may also suffice.
3.When the products used as the circuit like figure 3, an inductor named as LDM up to 10µH is recommended in the circuit to reduce the mutual interference.
4.Cannot be used in parallel for output and hot swap.

To reduce the output ripple furtherly, it is suggested to connect a "LC" filter at the output terminal, and recommended value of L is 10µH-47µH.

Figure 3

External "LC" output filter circuit diagram

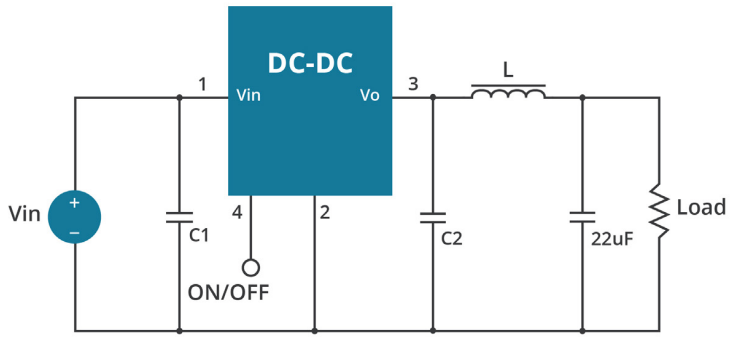

EMC RECOMMENDED CIRCUIT

Figure 4

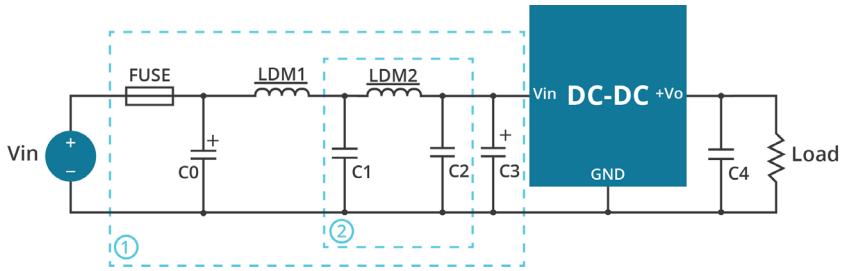

Table 2

Recommended external circuit components	
FUSE	choose according to actual input current
LDM1	82 µH
C0, C3	330 µF/50 V
C4	see Table 1
C1, C2	10 µF/50 V
LDM2	22 µH

Note: For EMC tests we use Part ① in Fig. 4 for immunity and part ② for emissions test. Selecting based on needs.

REVISION HISTORY

rev.	description	date
1.0	initial release	01/22/2020
1.01	Ctrl added	04/13/2020
1.02	derating curve, efficiency curves and circuit figures updated	09/17/2021
1.03	PN for 12V & 15V model updated	09/04/2022
1.04	PN key updated	01/26/2023
1.05	safeties updated	04/06/2023

The revision history provided is for informational purposes only and is believed to be accurate.

CUI INC
a bel group

Headquarters
20050 SW 112th Ave.
Tualatin, OR 97062
800.275.4899

Fax 503.612.2383
cui.com
techsupport@cui.com

CUI offers a two (2) year limited warranty. Complete warranty information is listed on our website.

CUI reserves the right to make changes to the product at any time without notice. Information provided by CUI is believed to be accurate and reliable. However, no responsibility is assumed by CUI for its use, nor for any infringements of patents or other rights of third parties which may result from its use.

CUI products are not authorized or warranted for use as critical components in equipment that requires an extremely high level of reliability. A critical component is any component of a life support device or system whose failure to perform can be reasonably expected to cause the failure of the life support device or system, or to affect its safety or effectiveness.