MODEL: PJ-011A | DESCRIPTION: DC POWER JACK

FEATURES

- 2.0 mm center pin
- 5.0 A rating
- vertical orientation
- threaded panel mount

SPECIFICATIONS

parameter	conditions/description	min	typ	max	units
rated input voltage			24		Vdc
rated input current				5.0	A
contact resistance[1]				30	mΩ
insulation resistance	at 500 Vdc	100			MΩ
voltage withstand	for 1 minute			500	Vac
insertion/withdrawal force		0.3		3	kg
operating temperature		-25		70	°C
life			5,000		cycles
flammability rating	UL94V-0				
RoHS	yes				

Note: 1. When measured at a current of less than 100 mA/1 kHz

SOLDERABILITY

parameter	conditions/description	min	typ	max	units
hand soldering	for 3~5 seconds			360	°C

MECHANICAL DRAWING

units: mm[inches]
tolerance: ±0.3 mm
unless otherwise noted

DESCRIPTION	MATERIAL	PLATING/COLOR
center pin	brass	nickel
terminal 1	brass t=0.4	silver
terminal 2	phosphor bronze t=0.2	silver
terminal 3	brass t=0.3	silver
nut	brass	nickel
insulator	bakelite t=1.0	natural
plastic	PBT+30%GF (UL94V-0)	black

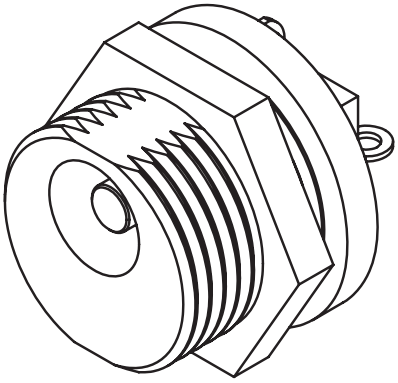

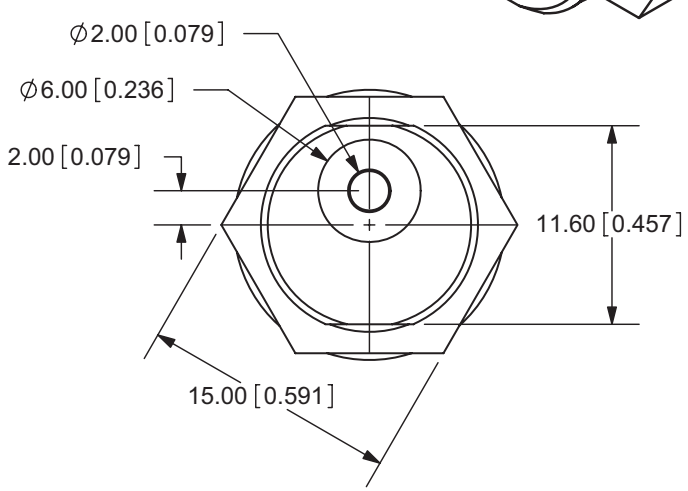

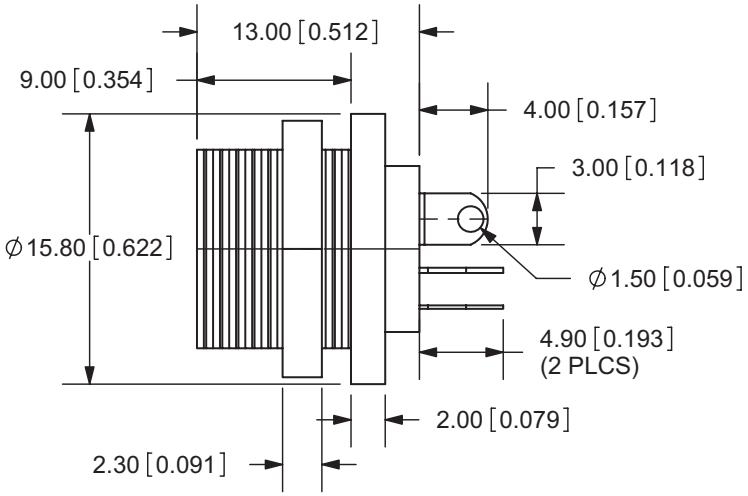

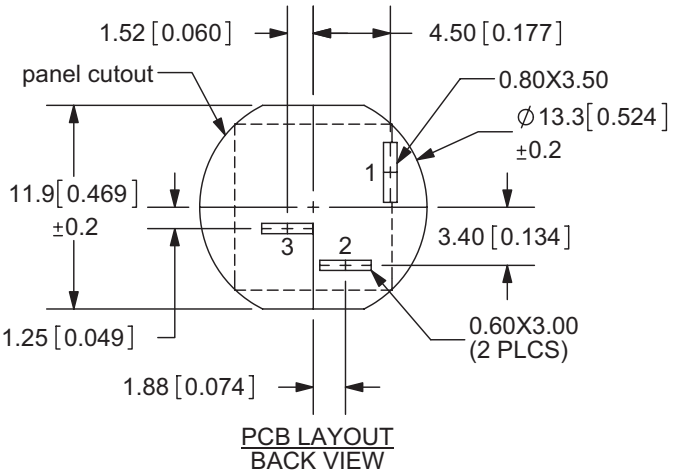

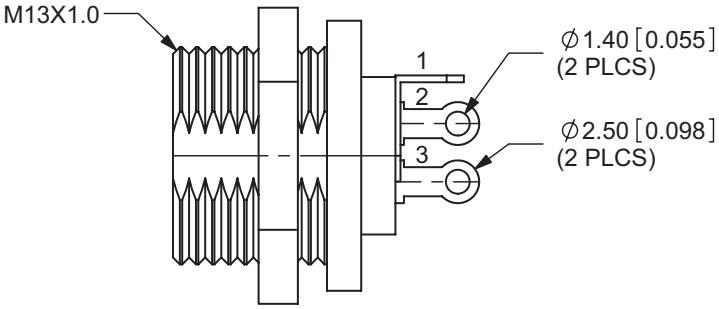

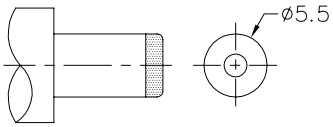

MATING PLUG
Jack Insertion Depth: 9.0 mm

SCHEMATIC	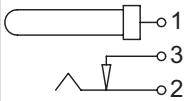
Model	PJ-011A
Center Pin	Ø2.0 mm

Note: 1. All specifications measured at 10~35°C, humidity at 45~85%, under standard atmospheric pressure, unless otherwise noted.

REVISION HISTORY

rev.	description	date
1.0	initial release	04/17/2006
1.01	pin positions updated	05/01/2008
1.02	model revised	05/12/2008
1.03	hole cutout dimensions added	06/27/2011
1.04	brand update	06/02/2020
1.05	logo, datasheet style update	08/05/2022
1.06	changed housing material	06/26/2023

The revision history provided is for informational purposes only and is believed to be accurate.

CUI Devices offers a one (1) year limited warranty. Complete warranty information is listed on our website.

CUI Devices reserves the right to make changes to the product at any time without notice. Information provided by CUI Devices is believed to be accurate and reliable. However, no responsibility is assumed by CUI Devices for its use, nor for any infringements of patents or other rights of third parties which may result from its use.

CUI Devices products are not authorized or warranted for use as critical components in equipment that requires an extremely high level of reliability. A critical component is any component of a life support device or system whose failure to perform can be reasonably expected to cause the failure of the life support device or system, or to affect its safety or effectiveness.