CUI INC
a bel group

SERIES: PRQ75W-D | **DESCRIPTION:** DC-DC CONVERTER

FEATURES

- 75W isolated output
- ¼-brick package with industry standard pin-out
- ultra-wide input voltage range
- single regulated output
- high efficiency up to 93%
- output short circuit, over current, over voltage, & over temperature protection
- 2250 Vdc isolation
- EN 62368-1
- available with heat sink or base plate
- remote on/off

MODEL

MODEL	input voltage typ (Vdc)	input voltage range (Vdc)	output voltage (Vdc)	output current min (A)	output current max (A)	output power max (W)	ripple and noise[1] max (mVp-p)	efficiency[2] typ (%)
PRQ75W-Q48-S5-D	48	18~75	5	0	15.0	75	250	91
PRQ75W-Q48-S12-D	48	18~75	12	0	6.25	75	200	92
PRQ75W-Q48-S15-D	48	18~75	15	0	5.0	75	200	93
PRQ75W-Q48-S24-D	48	18~75	24	0	3.13	75	250	92
PRQ75W-Q48-S48-D	48	18~75	48	0	1.56	75	250	92

Notes:
1. 20MHz bandwidth, nominal input, full load
2. Efficiency is measured In nominal input voltage and rated output load.

PART NUMBER KEY

PRQ75W-QXX - SXX - X - D

- PRQ75W: Base Number
- QXX: Input Voltage
- SXX: Output Voltage
- X: Heatsink:
  "blank" = no heatsink
  H = with heatsink
  B = base plate
- D: Packaging style
  DIP

INPUT

parameter	conditions/description	min	typ	max	units
input voltage		18	48	80	Vdc
filter	Pi filter				
current	full load/no load			1756/80	mA

OUTPUT

parameter	conditions/description	min	typ	max	units
output capacitance	5 Vdc output model 12 Vdc & 15 Vdc output models 24 Vdc output models 48 Vdc output models			6,000 2,000 1,000 470	µF µF µF µF
line regulation	low line to high line		±0.2	±0.5	%
load regulation	0~100% load		±0.5	±0.75	%
set-point accuracy	0~100% load		±1	±3	%
switching frequency	PWM mode		250		kHz
transient response	25% load step change 5 Vdc output model all other output models			 ±7.5 ±5	 % %
temperature coefficient	full load			±0.03	%/°C
CTRL[1]	module on: open or pulled high (3.5~12 Vdc) module off: pulled low to GND (0~1.2 Vdc)				
trim range	see application notes figure 4 5 Vdc output models other output models			 ±10 +10/-5	 % %
sense range	see application notes figures 5 and 6			105	%

Note: 1. The voltage of ctrl pin is relative to input pin GND.

PROTECTIONS

parameter	conditions/description	min	typ	max	units
over voltage protection		110		160	%
over current protection		110		190	%
short circuit protection	continuous, auto recovery, hiccup				
over temperature protection			115	120	°C

SAFETY AND COMPLIANCE

parameter	conditions/description	min	typ	max	units
isolation voltage	input to output, 5mA for 1 minute input to case, 5mA for 1 minute output to case, 5mA for 1 minute	2,250 1,500 500			Vdc Vdc Vdc
isolation resistance	input-output at 500 Vdc	100			MΩ
isolation capacitance	input to output at 100 KHz/0.1 V		2,200		pF
safety approvals	certified to 62368: EN, IEC				
conducted emmisions	CISPR32/EN55032 CLASS A and CLASS B (see recommended circuit, figure 3)				
radiated emmisions	CISPR32/EN55032 CLASS A and CLASS B (see recommended circuit, figure 3)				
ESD	IEC/EN61000-4-2, EN50121-3-2 Contact ±6KV Air ±8KV				
radiated immunity	IEC/EN61000-4-3, EN50121-3-2 10V/m				
EFT/burst	IEC/EN61000-4-4, EN50121-3-2 ±2KV (see recommended circuit, figure 2-1)				
surge	EN50121-3-2 differential mode ±1KV, 1.2/50us, source impedance 42Ω (see recommended circuit, figure 2-1)				
conducted immunity	IEC/EN61000-4-6, EN 50121-3-2 10 Vr.m.s				
MTBF	MIL-HDBK-217 at 25°C	500			kHours
RoHS	yes				

ENVIRONMENTAL

parameter	conditions/description	min	typ	max	units
operating temperature	see derating curve	-40		85	°C
storage temperature		-55		125	°C
storage humidity	non-condensing	5		95	%

MECHANICAL

parameter	conditions/description	min	typ	max	units
dimensions	61.8 x 40.2 x 12.7 with base plate 62.0 x 56.0 x 14.6 with heat sink 61.8 x 40.2 x 27.7				mm mm mm
case material	Aluminum alloy case, black flame-retardant and heat-resistant plastic (UL94 V-0)				
weight	 with base plate with heat sink		90 110 121		g g g
cooling method	natural convection (20 FLM)				

MECHANICAL DRAWING

units: mm [inches]
pin 1,2,3,5,6,7's diameter: 1.00 [0.039]
pin 4,8's diameter: 1.50 [0.059]
pin diameter tolerance: ±0.10 [±0.004]
general tolerance: ±0.50 [±0.020]
mounting hole screwing torque: Max 0.4 N·m

PIN CONNECTIONS	
PIN	FUNCTION
1	+Vin
2	CTRL
3	-Vin
4	0V
5	Sense-
6	Trim
7	Sense+
8	+Vo

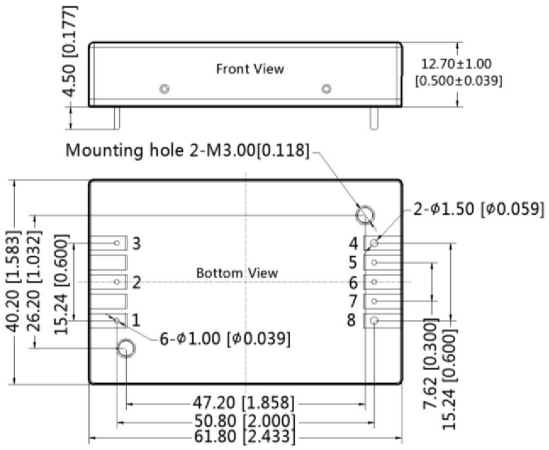

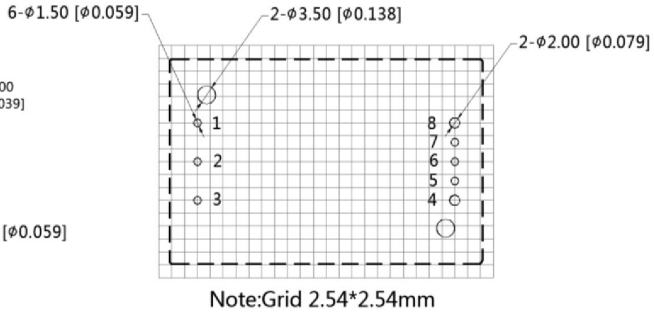

MECHANICAL DRAWING

with base plate
units: mm [inches]
pin 1,2,3,5,6,7's diameter: 1.00 [0.039]
pin 4,8's diameter: 1.50 [0.059]
pin diameter tolerance: ±0.10 [±0.004]
general tolerance: ±0.50 [±0.020]
mounting hole screwing torque: Max 0.4 N·m

PIN CONNECTIONS	
PIN	FUNCTION
1	+Vin
2	CTRL
3	-Vin
4	0V
5	Sense-
6	Trim
7	Sense+
8	+Vo

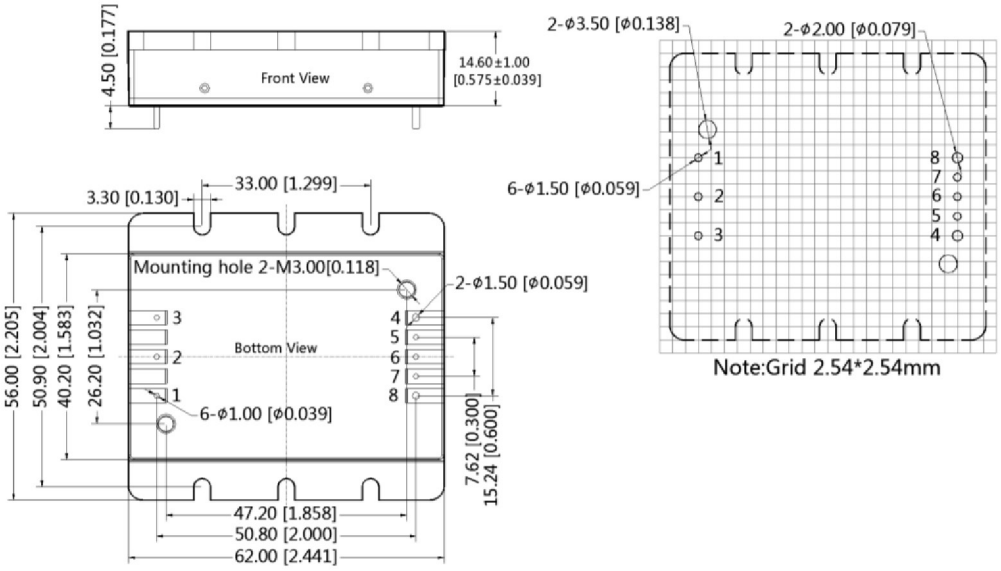

with heat sink
units: mm [inches]
pin 1,2,3,5,6,7's diameter: 1.00 [0.039]
pin 4,8's diameter: 1.50 [0.059]
pin diameter tolerance: ±0.10 [±0.004]
general tolerance: ±0.50 [±0.020]
mounting hole screwing torque: Max 0.4 N·m

PIN CONNECTIONS	
PIN	FUNCTION
1	+Vin
2	CTRL
3	-Vin
4	0V
5	Sense-
6	Trim
7	Sense+
8	+Vo

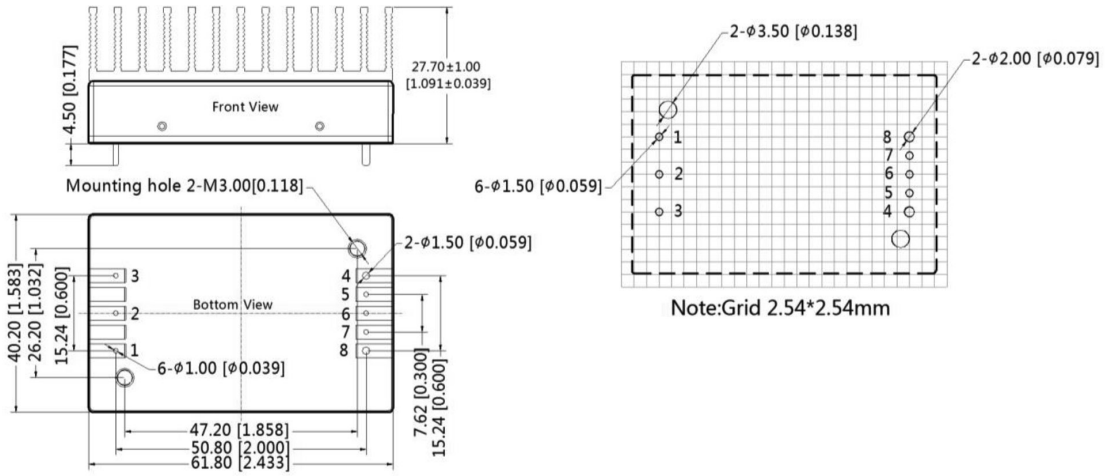

DERATING CURVES

PRQ75W-Q48-S24-D
TEMPERATURE DERATING CURVE (Vin =24 V)

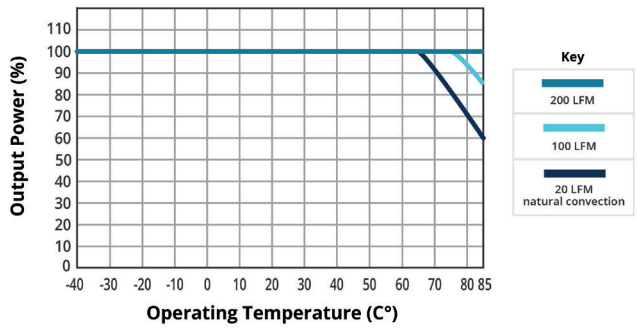

PRQ75W-Q48-S24-B-D (Base plate version)
TEMPERATURE DERATING CURVE (Vin =24 V)

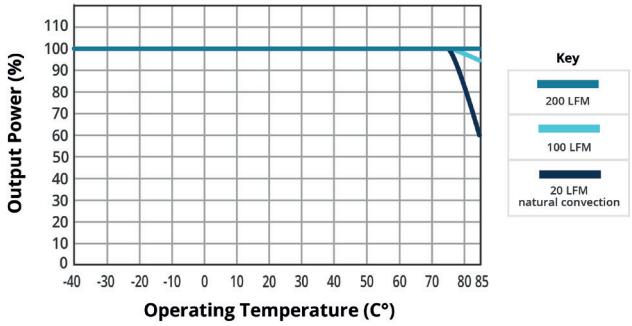

PRQ75W-Q48-S24-H-D (Heatsink version)
TEMPERATURE DERATING CURVE (Vin =24 V)

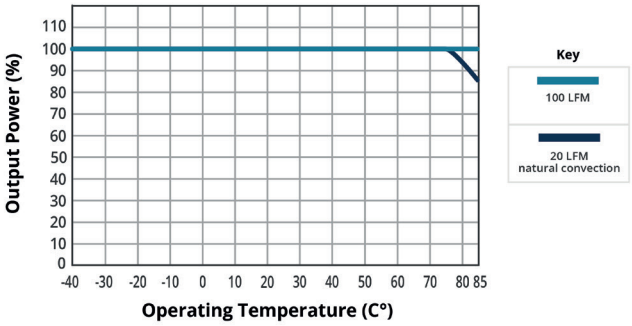

EFFICIENCY CURVES

EFFICIENCY VS INPUT VOLTAGE (Full load)

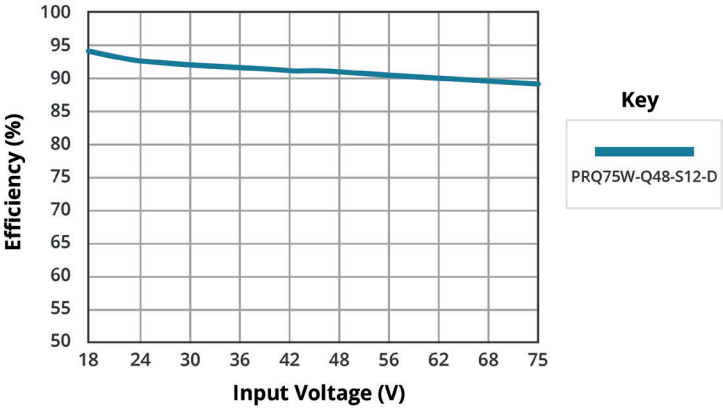

EFFICIENCY VS OUTPUT LOAD (Vin = 48V)

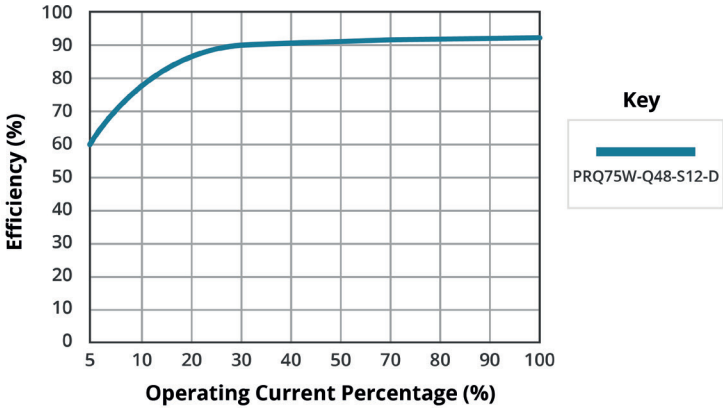

APPLICATION CIRCUIT

Figure 1

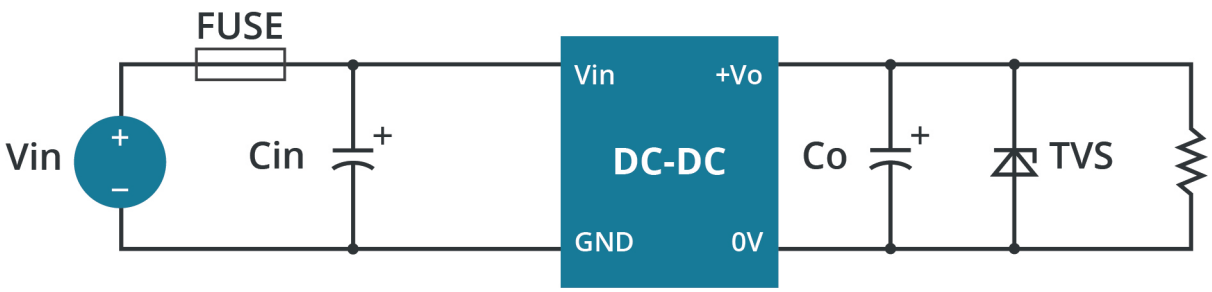

Table 1

Output voltage (Vdc)	FUSE	Cin (μF)	Cout (uF)	TVS
5	10A slow blow	220μF	470μF	SMDJ6.0A
12			220μF	SMDJ14A
15				SMDJ17A
24			110μF	SMDJ28A
48				SMDJ54A

Note: Please pay attention to the ambient temperature of the product when using an external capacitor, increase the electrolytic capacitor values to at least 1.5 times the original parameterif the ambient temperature is low(such as -25°C).

EMC RECOMMENDED CIRCUITS

Figure 2

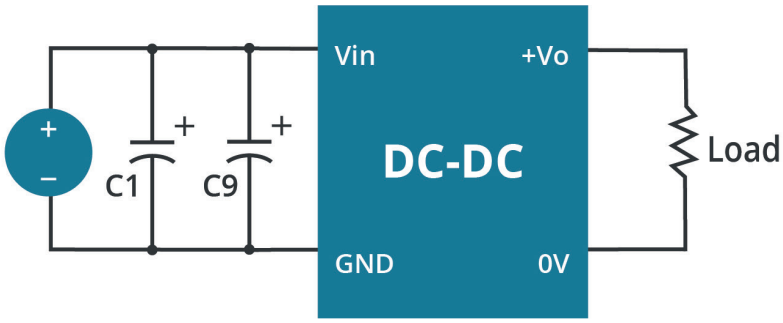

Table 2

Capacitor	Recommended value	Function
C1	150μF electrolytic	meet EFT and surge
C9	47μF electrolytic	

EMC RECOMMENDED CIRCUITS (CONTINUED)

Figure 3

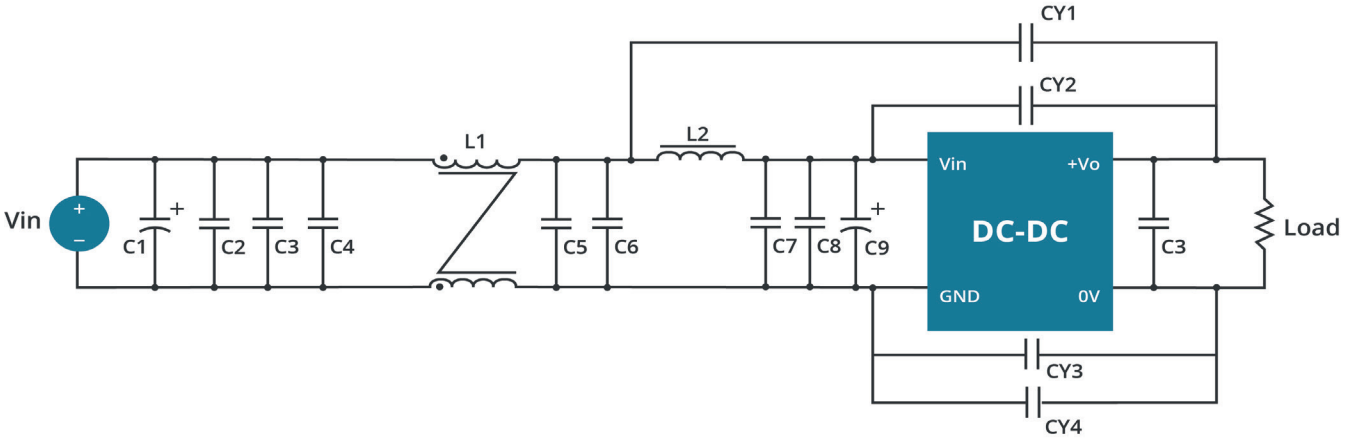

Table 3

List of Components	Recommended Component value	Function
C1	150µF electrolytic capacitor	Meet conducted emmisions and radi-ated emmisions
C9	47µF electrolytic capacitor	
C1	150µF electrolytic capacitor	
C9	47µF electrolytic capacitor	
C2, C3, C4, C5, C6, C7, C8	2.2µF ceramic capacitor	
L1	1.0 common mode inductor	
L2	1.5µH inductance	
CY1, CY2, CY3, CY4	1nF Y1 safety capacitor	

APPLICATION NOTES

Figure 3

Trim up

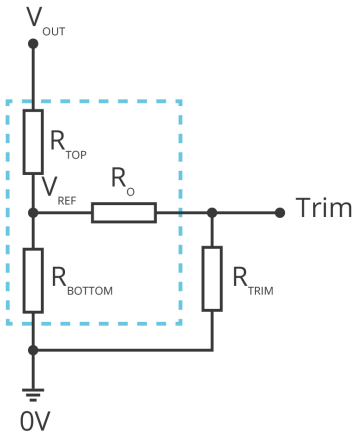

Trim down

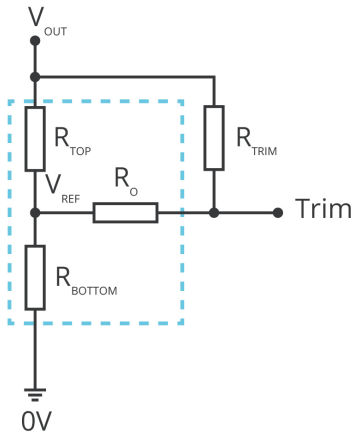

$$R_{TRIM} = \frac{a \cdot R_{BOTTOM}}{R_{BOTTOM} - a} - R_O \qquad a = \frac{V_{REF}}{V_{OUT} - V_{REF}} \cdot R_{TOP}$$

Formula for Trim up

$$R_{TRIM} = \frac{a \cdot R_{TOP}}{R_{TOP} - a} - R_O \qquad a = \frac{V_{OUT} - V_{REF}}{V_{REF}} \cdot R_{BOTTOM}$$

Formula for Trim down

Table 3

V_{OUT}	R_{TOP}	R_{BOTTOM}	R_O	V_{REF}
(Vdc)	(kΩ)	(kΩ)	(kΩ)	(V)
5	3.036	3.0	10	2.5
12	11.0	2.87	15	2.5
15	14.03	2.8	15	2.5
24	24.872	2.87	15	2.5
48	53.017	2.913	15	2.5

Note: Value for R_{TOP}, R_{BOTTOM}, R_O, and V_{REF} refer to Table 3 (fixed internal values).
R_{TRIM}: Trim resistance
a: User-defined parameter, no actual meanings
V_{OUT}: Nominal output voltage

APPLICATION NOTES (CONTINUED)

Figure 5

REMOTE SENSE CONNECTION IF NOT USED

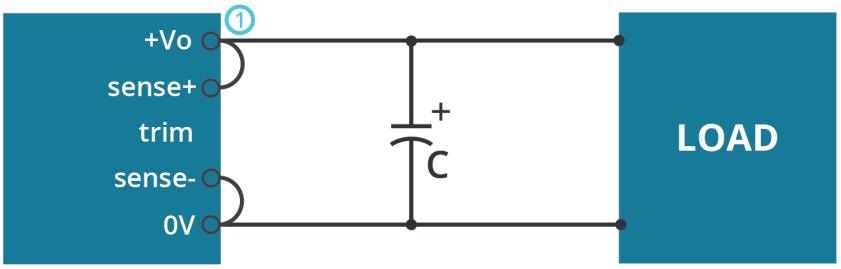

Note:
1. Lines must be kept as short as possible.
2. If the sense function is not used for remote regulation the user must connect the +Sense to + Vo and -Sense to 0V at the DC-DC converter pins and will compensate for voltage drop across pins only.
3. The connections between Sense lines and their respective power lines must be kept as short as possible, otherwise they may be picking up noise, interference and/or causing unstable operation of the power module.

Figure 6

REMOTE SENSE CONNECTION USED FOR COMPENSATION

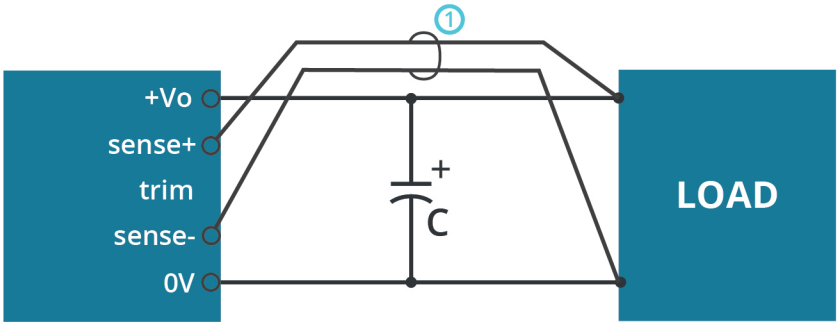

Note:
1. In cables and discrete wiring applications, twisted pair or other techniques should be implemented.
2. PCB-tracks or cables/wires for Remote Sense must be kept as short as possible.
3. Using remote sense with long wires long wires may cause unstable operation. Note that large wire impedance may cause oscillation of the output voltage and/or increased ripple. Consult technical support or factory for further advice of sense operation.
4. We recommend using adequate cross section for PCB-track layout and/or cables to connect the power supply module to the load in order to keep the voltage drop below 0.3V and to make sure the power supply's output voltage remains within the specified range

REVISION HISTORY

rev.	description	date
1.0	initial release	01/29/2021
1.01	trim resistor equations and figures updated	10/14/2022

The revision history provided is for informational purposes only and is believed to be accurate.

CUI INC
a bel group

Headquarters
20050 SW 112th Ave.
Tualatin, OR 97062
800.275.4899

Fax 503.612.2383
cui.com
techsupport@cui.com

CUI offers a two (2) year limited warranty. Complete warranty information is listed on our website.

CUI reserves the right to make changes to the product at any time without notice. Information provided by CUI is believed to be accurate and reliable. However, no responsibility is assumed by CUI for its use, nor for any infringements of patents or other rights of third parties which may result from its use.

CUI products are not authorized or warranted for use as critical components in equipment that requires an extremely high level of reliability. A critical component is any component of a life support device or system whose failure to perform can be reasonably expected to cause the failure of the life support device or system, or to affect its safety or effectiveness.