CUI INC
a bel group

SERIES: PYB30-U | DESCRIPTION: DC-DC CONVERTER

FEATURES

- up to 30 W isolated output
- industry standard pinout
- 4:1 input range (9~36 Vdc, 18~75 Vdc)
- smaller package
- single/dual/triple regulated outputs
- 1,500 Vdc isolation
- continuous short circuit, over current protection, over voltage protection
- temperature range (-40~85°C)
- six-sided metal shielding
- efficiency up to 90%

RoHS

MODEL	input voltage typ (Vdc)	input voltage range (Vdc)	output voltage (Vdc)	output current min (mA)	output current max (mA)	output power max (W)	ripple and noise[1] max (mVp-p)	efficiency typ (%)
PYB30-Q24-S5-U*	24	9~36	5	300	6000	30	100	88
PYB30-Q24-S12-U*	24	9~36	12	125	2500	30	100	88
PYB30-Q24-S15-U*	24	9~36	15	100	2000	30	100	90
PYB30-Q24-D5-U*	24	9~36	±5	±150	±3000	30	100	86
PYB30-Q24-D12-U*	24	9~36	±12	±63	±1250	30	100	89
PYB30-Q24-D15-U*	24	9~36	±15	±50	±1000	30	100	90
PYB30-Q24-T312-U*	24	9~36	3.3 ±12	175 ±31	3500 ±625	26.5	100	85
PYB30-Q24-T315-U*	24	9~36	3.3 ±15	175 ±25	3500 ±500	26.5	100	86
PYB30-Q24-T512-U	24	9~36	5 ±12	150 ±31	3000 ±625	30	100	88
PYB30-Q24-T515-U*	24	9~36	5 ±15	150 ±25	3000 ±500	30	100	88
PYB30-Q48-S5-U*	48	18~75	5	300	6000	30	100	88
PYB30-Q48-S12-U	48	18~75	12	125	2500	30	100	88
PYB30-Q48-S15-U*	48	18~75	15	100	2000	30	100	89
PYB30-Q48-D5-U*	48	18~75	±5	±150	±3000	30	100	86
PYB30-Q48-D12-U*	48	18~75	±12	±63	±1250	30	100	87
PYB30-Q48-D15-U*	48	18~75	±15	±50	±1000	30	100	87
PYB30-Q48-T312-U*	48	18~75	3.3 ±12	175 ±31	3500 ±625	26.5	100	85
PYB30-Q48-T315-U*	48	18~75	3.3 ±15	175 ±25	3500 ±500	26.5	100	85
PYB30-Q48-T512-U*	48	18~75	5 ±12	150 ±31	3000 ±625	30	100	88
PYB30-Q48-T515-U*	48	18~75	5 ±15	150 ±25	3000 ±500	30	100	87

Notes: 1. Ripple and noise are measured at 20 MHz BW by "parallel cable" method with 1 μF ceramic and 10 μF electrolytic capacitors on the output.
2. * Discontinued model.

DISCONTINUED

PART NUMBER KEY

PYB30 - QXX - XXX - U

- Base Number
- Input Voltage
- Output
  S = single
  D = dual
  T = triple
- Output Voltage
- Mounting Type
  U = U-Frame

INPUT

parameter	conditions/description	min	typ	max	units
operating input voltage	24 Vdc input models 48 V input models	9 18	24 48	36 75	Vdc Vdc
start-up voltage	24 Vdc input models 48 Vdc input models (single/dual output models) 48 Vdc input models (triple output models)			9 18 17.8	Vdc Vdc Vdc
under voltage shutdown[1]	24 Vdc input models 48 Vdc input models	7.8 16			Vdc Vdc
surge voltage	for maximum of 1 second 24 Vdc input models 48 Vdc input models	 -0.7 -0.7		 50 100	 Vdc Vdc
start-up time			10		ms
filter	pi filter				
CTRL[2]	models ON (CTRL open or connect high level, 2.5~12 Vdc)				
	models OFF (CTRL connect GND or low level, 0~1.2 Vdc)				
	input current (models OFF)		1		mA

Notes: 1. Contact CUI if you are planning to use this feature in your application.
2. CTRL pin voltage is referenced to GND.

OUTPUT

parameter	conditions/description	min	typ	max	units
line regulation	full load, input voltage from low to high single and dual output models triple output models (main output) triple output models (auxiliary outputs)		 ±0.2	 ±0.5 ±1 ±5	 % % %
load regulation[3]	5% to 100% load, nominal input single and dual output models triple output models (main output) triple output models (auxiliary outputs)		 ±0.5	 ±1 ±2 ±5	 % % %
cross regulation	dual output models: main output 50% load, secondary output from 10% to 100% load			 ±5	 %
voltage accuracy	single and dual output models triple output models (main output) triple output models (auxiliary outputs)		±1 ±1 ±3	±3 ±3 ±5	% % %
adjustability[4]			±10		%
switching frequency	PWM mode		400		kHz
transient recovery time	25% load step change		300	500	µs
transient response deviation	25% load step change		±3	±5	%
temperature coefficient	100% load, single and dual output models 100% load, triple output models			±0.02 ±0.03	%/°C %/°C

Notes: 3. For dual output models, unbalanced load can not exceed ±5%. If ±5% is exceeded, it may not meet all specifications.
4. Output trimming available on single and dual output models only.

DISCONTINUED

PROTECTIONS

parameter	conditions/description	min	typ	max	units
short circuit protection	hiccup, continuous, automatic recovery				
over current protection			150		%
over voltage protection	3.3 Vdc output models 5 Vdc output models 12 Vdc output models 15 Vdc output models		3.9 6.2 15 18		Vdc Vdc Vdc Vdc

SAFETY AND COMPLIANCE

parameter	conditions/description	min	typ	max	units
isolation voltage	for 1 minute at 1 mA max.	1,500			Vdc
isolation resistance	at 500 Vdc	1,000			MΩ
conducted emissions	CISPR22/EN55022, class A, class B (external circuit required, see Figure 1-b)				
radiated emissions	CISPR22/EN55022, class A, class B (external circuit required, see Figure 1-b)				
ESD	IEC/EN61000-4-2, class B, contact ± 4kV				
radiated immunity	IEC/EN61000-4-3, class A, 10V/m				
EFT/burst	IEC/EN61000-4-4, class B, ± 2kV (external circuit required, see Figure 1-a)				
surge	IEC/EN61000-4-5, class B, ± 2kV (external circuit required, see Figure 1-a)				
conducted immunity	IEC/EN61000-4-6, class A, 3 Vr.m.s				
voltage dips & interruptions	IEC/EN61000-4-29, class B, 0%-70%				
MTBF	as per MIL-HDBK-217F @ 25°C	1,000,000			hours
RoHS	2011/65/EU				

ENVIRONMENTAL

parameter	conditions/description	min	typ	max	units
operating temperature	see derating curve	-40		85	°C
storage temperature		-55		125	°C
storage humidity	non-condensing	5		95	%
case temperature	at full load, Ta=71°C			105	°C

MECHANICAL

parameter	conditions/description	min	typ	max	units
dimensions	67.5 x 54.99 x 19.05				mm
case material	aluminum alloy				
weight			58		g

DISCONTINUED

MECHANICAL DRAWING

U-FRAME

units: mm[inch]
tolerance: ±0.5[±0.020]

Wire range: 22~14 AWG
DIN rail mounting kit available
(part# STK-DIN)

PIN CONNECTIONS			
PIN	Single Output	Dual Output	Triple Output
1	Vin	Vin	Vin
2	GND	GND	GND
3	CTRL	CTRL	CTRL
4	Case	Case	Case
5	NC	Trim	-Vo2
6	Trim	-Vo	0V
7	0V	0V	+Vo1
8	+Vo	+Vo	+Vo2

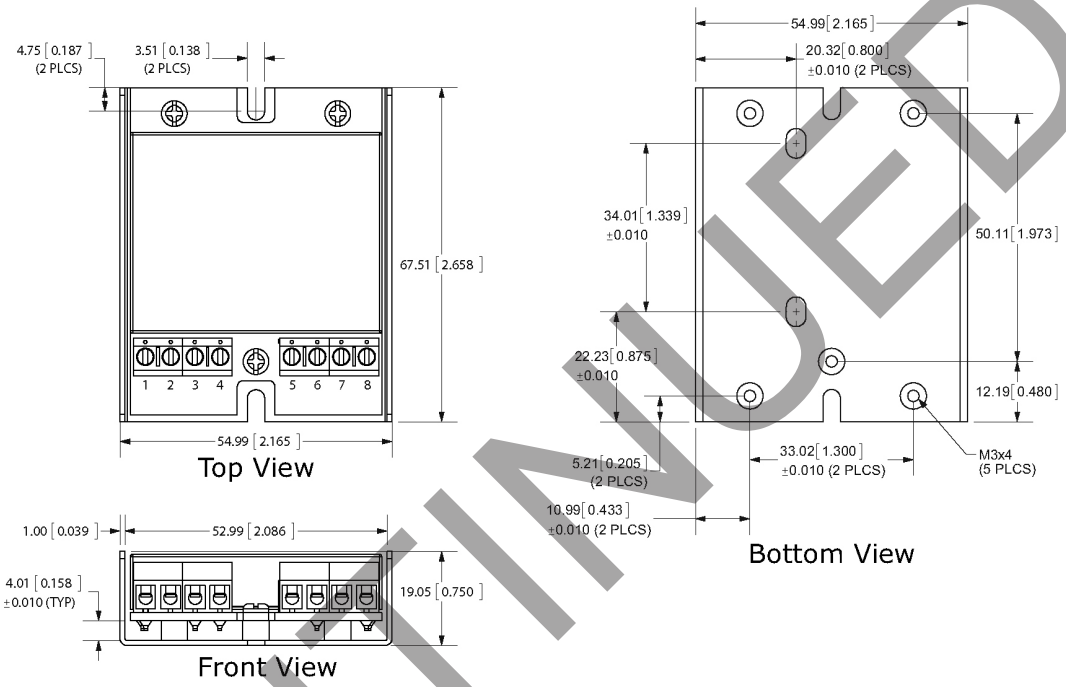

DISCONTINUED

DERATING CURVES

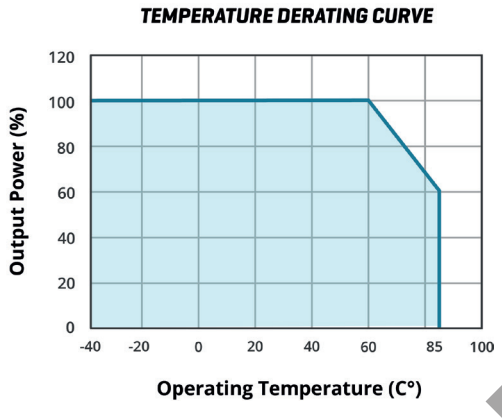

EMC RECOMMENDED CIRCUIT

Figure 1

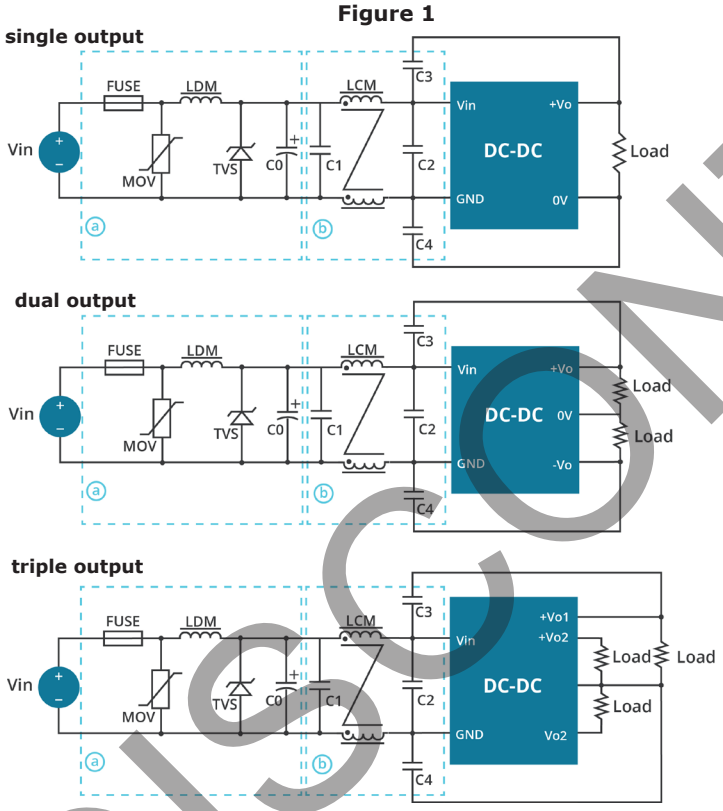

Table 1

Recommended external circuit components		
Vin (Vdc)	24	48
FUSE	Choose according to input current	
MOV	10D560K	10D101K
LDM	56µH	56µH
TVS	SMCJ48A	SMCJ90A
C0	120µF/50V	120µF/100V
C1	4.7µF/50V	2.2µF/100V
LCM	2.2mH	2.2mH
C2	4.7µF/50V	2.2µF/100V
C3*	1nF/2kV	1nF/2kV
C4*	1nF/2kV	1nF/2kV

Note: *2nF/2kV capacitors for triple output, 48 Vdc input models.

TEST CONFIGURATION

Figure 2

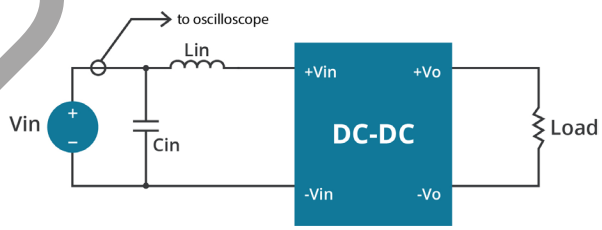

Table 2

External components	
Lin	4.7µH
Cin	220µF, ESR < 1.0Ω at 100 kHz

Note: Input reflected-ripple current is measured with an inductor Lin and Capacitor Cin to simulate source impedance.

DISCONTINUED

APPLICATION NOTES

1. **Recommended circuit**
This series has been tested according to the following recommended testing circuit before leaving the factory. This series should be tested under load (see Figure 3). If you want to further decrease the input/output ripple, you can increase the capacitance accordingly or choose capacitors with low ESR (see Table 3). However, the capacitance of the output filter capacitor must be appropriate. If the capacitance is too high, a startup problem might arise. For every channel of the output, to ensure safe and reliable operation, the maximum capacitance must be less than the maximum capacitive load (see Table 4).

Figure 3

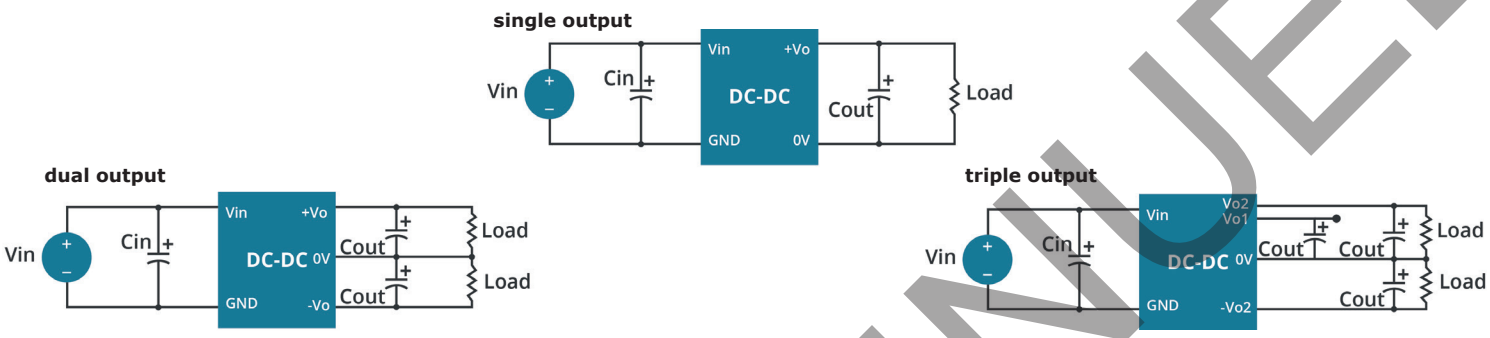

Table 3

Single Vout (Vdc)	Cin (µF)	Cout (µF)	Dual Vout (Vdc)	Cin (µF)	Cout[1] (µF)	Triple Vout (Vdc)	Cin (µF)	Cout[1] (µF)
--	--	--	--	--	--	3.3	10	10
5	10	10	±5	10	10	5	10	10
12	10	4.7	±12	10	4.7	±12	10	4.7
15	10	4.7	±15	10	4.7	±15	10	4.7

Note: 1. For each output.

Table 4

Single Vout (Vdc)	Max. Capacitive Load (µF)	Dual Vout (Vdc)	Max. Capacitive Load[1] (µF)	Triple Vout (Vdc)	Max. Capacitive Load[1] (µF)
--	--	--	--	3.3/±12	4700/300
5	6000	5	2000	3.3/±15	4700/220
12	2500	12	1250	5/±12	4700/300
15	1100	15	680	5/±15	4700/220

Note: 1. For each output.

2. **Output voltage trimming**
Leave open if not used.

Figure 4
Application Circuit for Trim pin
(part in broken line is the interior of models)

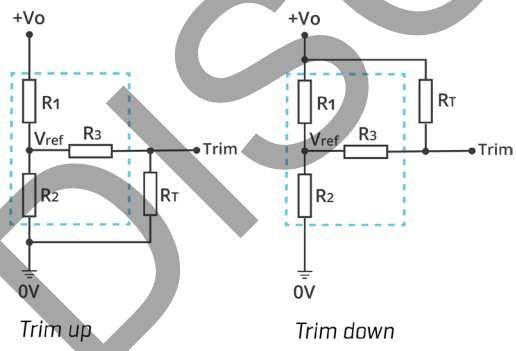

Formula for Trim Resistor

up: $R_T = \frac{aR_2}{R_2 - a} - R_3$ $\quad a = \frac{Vref}{Vo' - Vref} \cdot R_1$

down: $R_T = \frac{aR_1}{R_1 - a} - R_3$ $\quad a = \frac{Vo' - Vref}{Vref} \cdot R_2$

Note: Value for R1, R2, R3, and Vref refer to Table 5
R_T: Trim Resistor
a: User-defined parameter, no actual meanings
Vo': The trim up/down voltage

Table 5

Vout (Vdc)	R1 (kΩ)	R2 (kΩ)	R3 (kΩ)	Vref (V)
5	2.883	2.864	10	2.5
12	10.971	2.864	17.8	2.5
15	14.497	2.864	17.8	2.5

Note: 1. Minimum load shouldn't be less than 5%, otherwise ripple may increase dramatically. Operation under minimum load will not damage the converter, however, they may not meet all specifications listed.
2. Maximum capacitive load is tested at input voltage range and full load.
3. All specifications are measured at Ta=25°C, humidity<75%, nominal input voltage and rated output load unless otherwise specified.

DISCONTINUED

REVISION HISTORY

rev.	description	date
1.0	initial release	06/26/2013
1.01	updated spec	08/16/2013
1.02	updated spec	08/18/2014
1.03	discontinued heat sink versions	06/21/2019
1.04	company logo updated	02/16/2021
1.05	removed heat sink versions, derating curve updated	03/15/2021
1.06	circuit figures updated	08/30/2021
1.07	discontinued models PYB30-Q24-D12-U, PYB30-Q24-D15-U, PYB30-Q24-D5-U, PYB30-Q24-S12-U, PYB30-Q24-S15-U, PYB30-Q24-S5-U, PYB30-Q24-T315-U, PYB30-Q24-T515-U, PYB30-Q48-D15-U, PYB30-Q48-T315-U, PYB30-Q48-T512-U	12/14/2022
1.08	discontinued models PYB30-Q48-S5-U, PYB30-Q48-S15-U, PYB30-Q48-D5-U, PYB30-Q48-D12-U, PYB30-Q24-T312-U, PYB30-Q48-T312-U & PYB30-Q48-T515-U	04/11/2023

The revision history provided is for informational purposes only and is believed to be accurate.

DISCONTINUED

CUI INC
a bel group

Headquarters
20050 SW 112th Ave.
Tualatin, OR 97062
800.275.4899

Fax 503.612.2383
cui.com
techsupport@cui.com

CUI offers a two (2) year limited warranty. Complete warranty information is listed on our website.

CUI reserves the right to make changes to the product at any time without notice. Information provided by CUI is believed to be accurate and reliable. However, no responsibility is assumed by CUI for its use, nor for any infringements of patents or other rights of third parties which may result from its use.

CUI products are not authorized or warranted for use as critical components in equipment that requires an extremely high level of reliability. A critical component is any component of a life support device or system whose failure to perform can be reasonably expected to cause the failure of the life support device or system, or to affect its safety or effectiveness.