For more information, please visit the product page.

REV.	DESCRIPTION	DATE
A	NEW DRAWING	6/29/2007
B	plating on terminals 1 & 2 changed from silver to tin	8/3/2010
C	added mounting hole dimension	11/5/2010

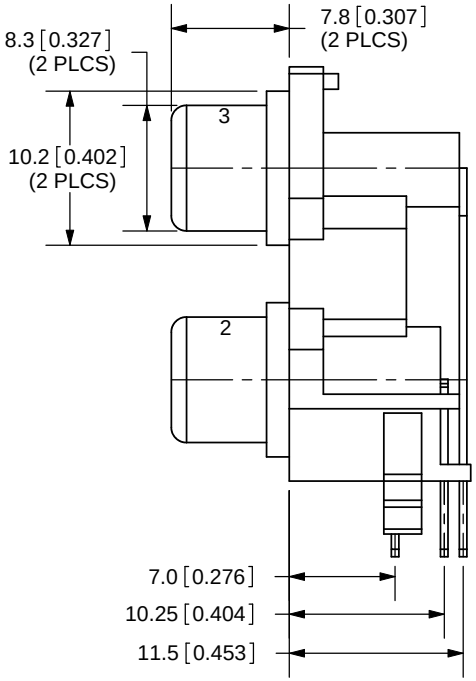

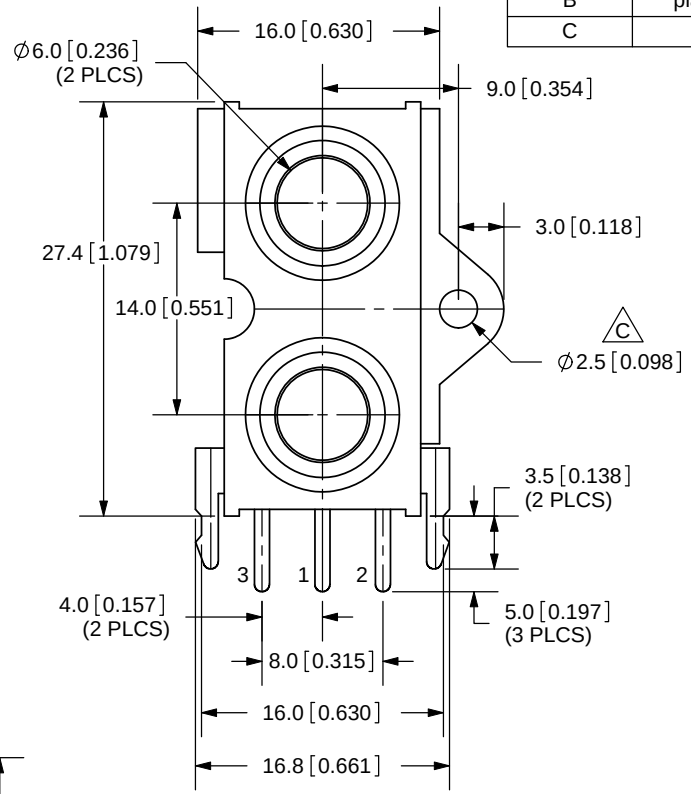

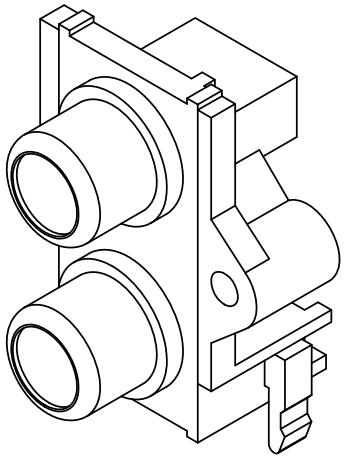

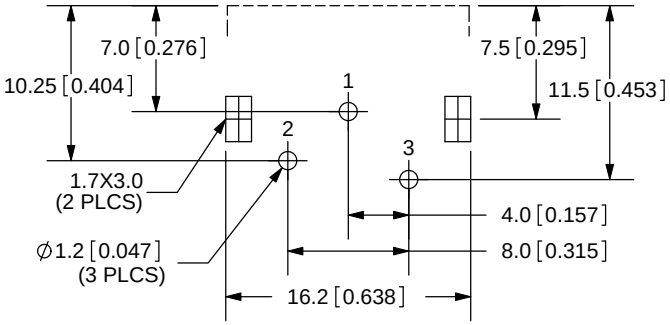

PCB LAYOUT
TOP VIEW

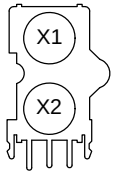

SPECIFICATIONS:
RATING: 24V DC @ 5A
CONTACT RESISTANCE: 30m OHMS MAX
INSULATION RESISTANCE: 100M OHMS MIN: 100V DC
VOLTAGE WITHSTAND: 500V AC R.M.S. FOR 1 MINUTE
LIFE: 5,000 CYCLES

TOLERANCE:
±0.3mm UNLESS OTHERWISE SPECIFIED

RoHS

COLOR INDEX		
PART NO.	INPUT X1	INPUT X2
RCJ-2221	Red Color	Black Color
RCJ-22X1 X2	Color X1	Color X2

MODEL NO.	RCJ-22XX
SCHEMATIC	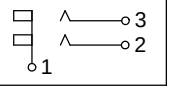

COLOR CHART	
1	Black
2	Red
3	White
4	Yellow
5	Blue
6	Green

	MATERIAL	PLATING
BARREL (1)	Brass	Nickel
TERMINAL (2)	Brass	Tin
TERMINAL (3)	Brass	Tin
BASE	ABS	Black Color
COVER	ABS	Black Color
INPUT X2	PBT	see color index
INPUT X1	PBT	see color index

CUI INC
20050 SW 112th Ave.
Tualatin, OR 97062
Phone: 503-612-2300
800-275-4899
Fax: 503-612-2383
Website: www.cui.com

TITLE: RCA Jack, Dual, Rt Angle, PCB Mount, Vert.		REV: C
PART NO. RCJ-22XX	UNITS: MM [INCHES]	
DRAWN BY: ZRJ	APPROVED BY:	SCALE: 2:1

PC FILE NAME: RCJ-22XX

COPYRIGHT 2010 BY CUI INC.