CUIDEVICES

SERIES: SDS-J | **DESCRIPTION:** STANDARD DIN CONNECTOR

FEATURES

- PCB mount
- right angle orientation
- 3~8, 13 pins

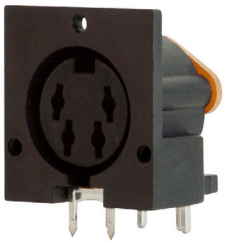

RoHS

PART NUMBER KEY

SDS - XX J

Base Number

Pin Options
30* = 3 pins
40 = 4 pins
50 = 5 pins, 180 degrees
60 = 6 pins
70 = 7 pins
80 = 8 pins
SDD-130J = 13 pins

Notes: *Discontinued model SDS-30J

SPECIFICATIONS

parameter	conditions/description	min	typ	max	units
rated input voltage			100 24		Vac Vdc
rated input current	at 100 Vac at 24 Vdc		2 1		A A
contact resistance				30	mΩ
insulation resistance	at 250 Vdc	50			MΩ
voltage withstand	for 1 minute			250	Vac
insertion force				6.5	kg
withdrawal force		0.5		5	kg
operating temperature		-40		85	°C
storage temperature		-40		85	°C
life			1,000		cycles
flammability rating	UL94V-0				
RoHS	yes				

MECHANICAL DRAWING (SDS-30J)

units: mm
tolerance: ±0.2 mm

DESCRIPTION	MATERIAL	PLATING/COLOR
earth terminal	phosphor bronze	tin
contact terminals	brass	tin
plate	bakelite	
plastic	PBT	

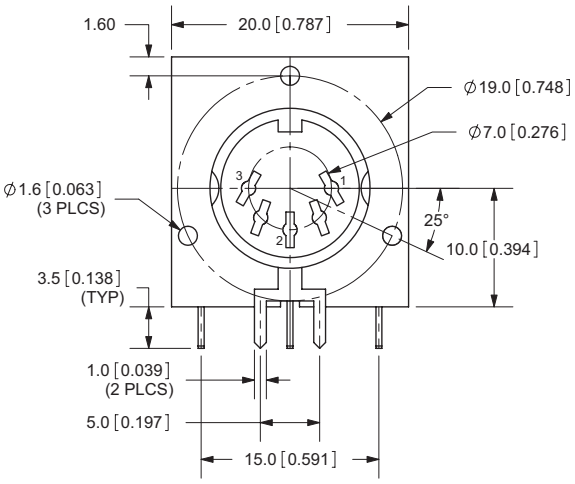

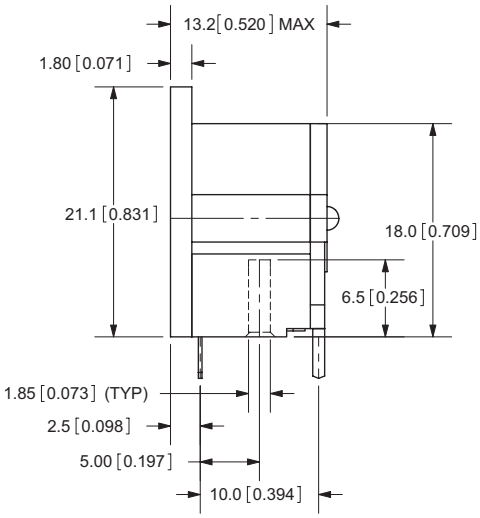

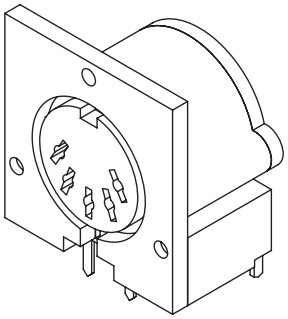

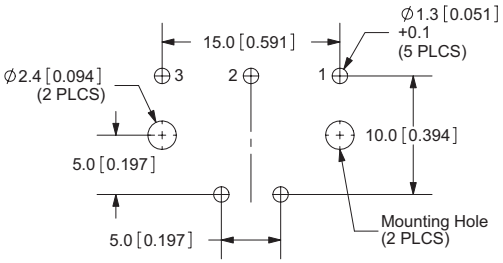

Recommended PCB Layout
Top View

MECHANICAL DRAWING (SDS-40J)

units: mm
tolerance: ±0.3 mm
PCB tolerance: ±0.05 mm

ITEM	DESCRIPTION	MATERIAL	PLATING/COLOR
1	housing	PBT (UL94V-0)	black
2	ground	phosphor bronze	silver
3	cover	PBT (UL94V-0)	black
4	terminal	phosphor bronze	silver

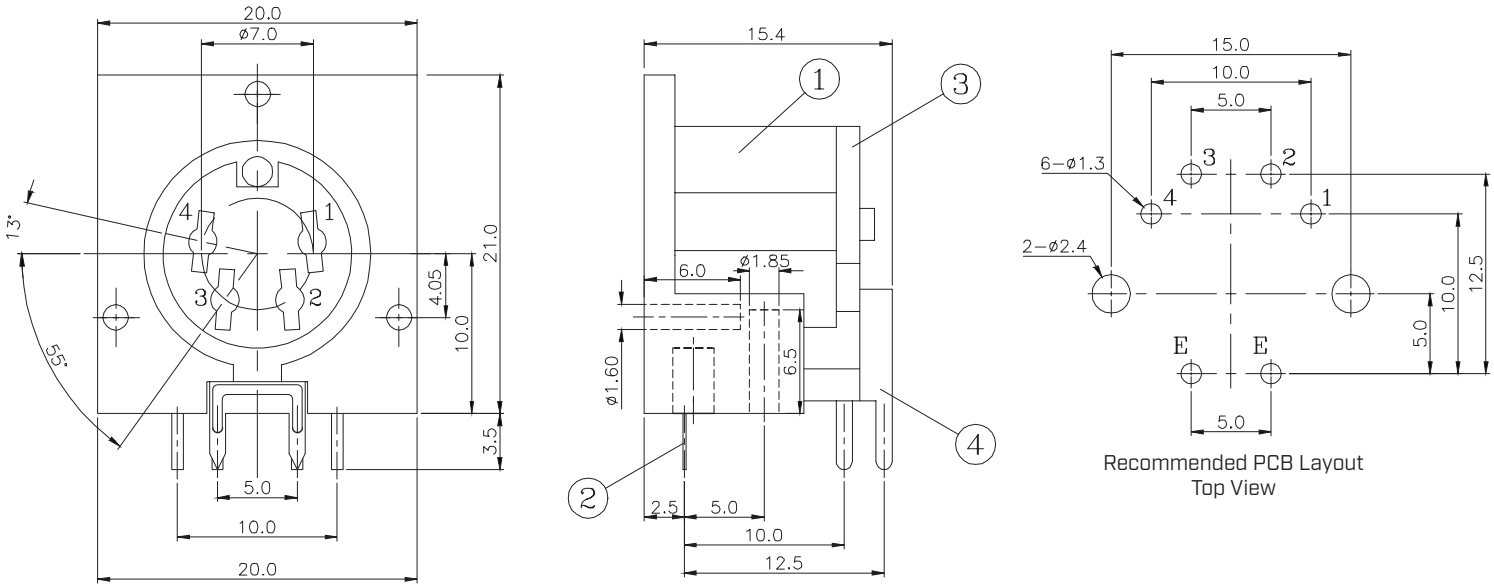

Recommended PCB Layout
Top View

MECHANICAL DRAWING (SDS-50J)

units: mm
tolerance: ±0.3 mm
PCB tolerance: ±0.05 mm

ITEM	DESCRIPTION	MATERIAL	PLATING/COLOR
1	housing	PBT (UL94V-0)	black
2	ground	phosphor bronze	copper/tin
3	cover	PE	
4	terminal	phosphor bronze	copper/tin

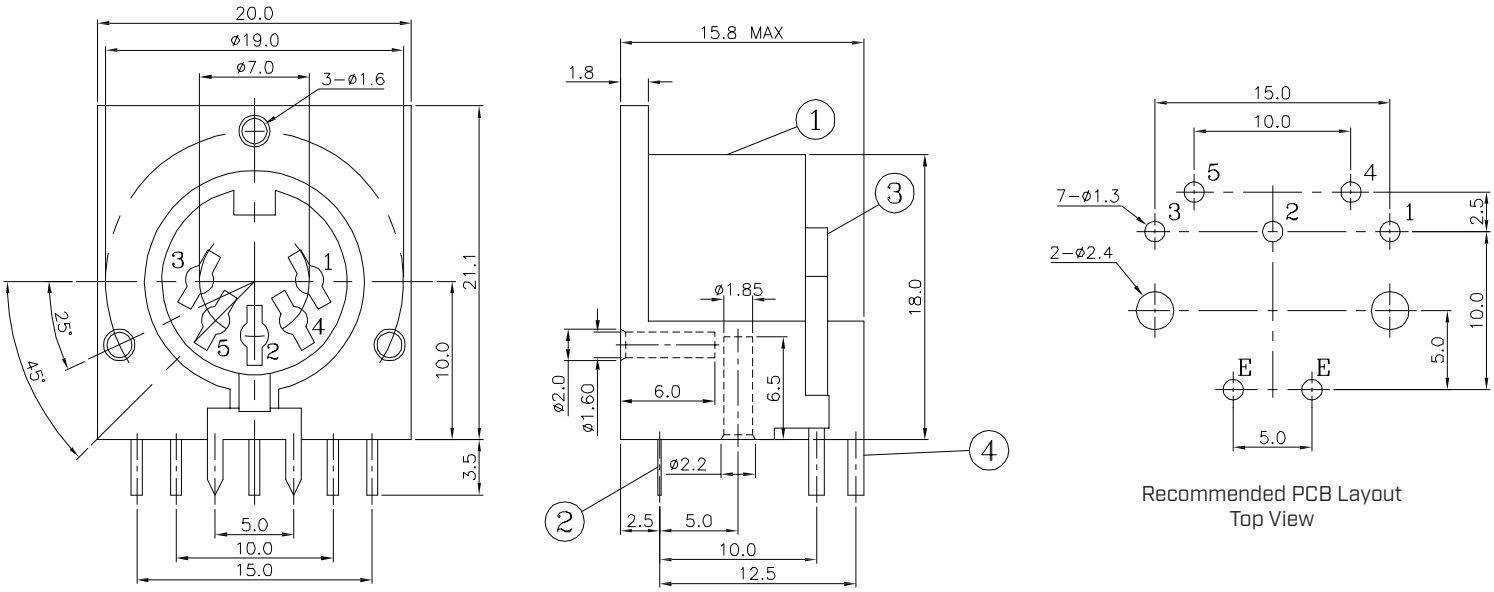

Recommended PCB Layout
Top View

MECHANICAL DRAWING (SDS-60J)

units: mm
tolerance: ±0.3 mm
PCB tolerance: ±0.05 mm

ITEM	DESCRIPTION	MATERIAL	PLATING/COLOR
1	housing	PBT (UL94V-0)	black
2	ground	phosphor bronze	copper/tin
3	cover	PF	yellow
4	terminal	phosphor bronze	copper/tin

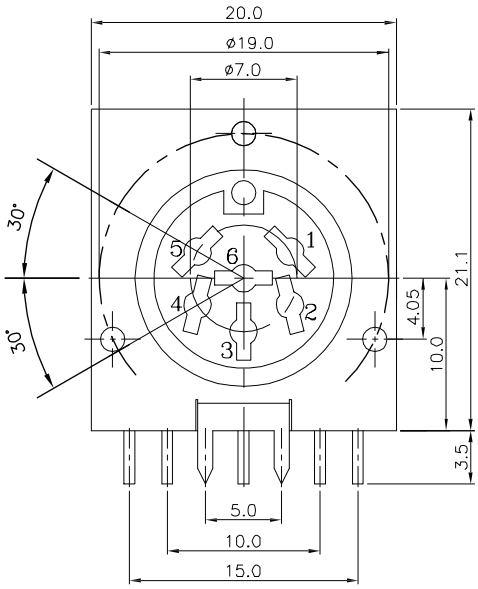

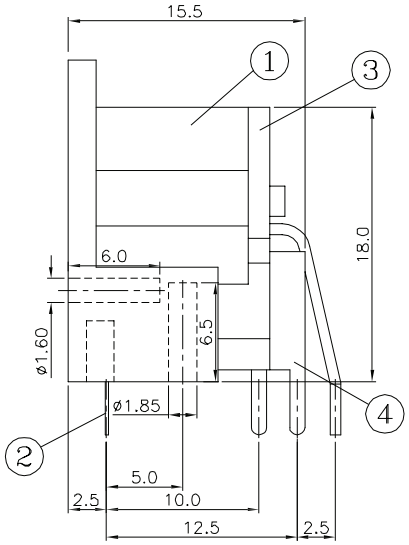

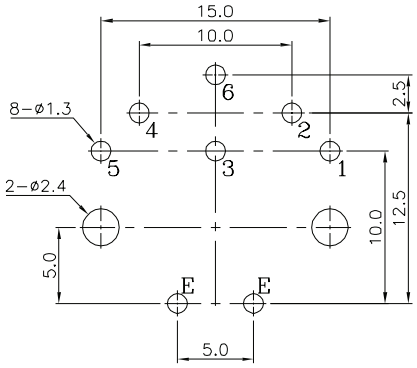

Recommended PCB Layout
Top View

MECHANICAL DRAWING (SDS-70J)

units: mm
tolerance: ±0.3 mm
PCB tolerance: ±0.05 mm

ITEM	DESCRIPTION	MATERIAL	PLATING/COLOR
1	housing	PBT (UL94V-0)	black
2	ground	phosphor bronze	silver
3	cover	PBT (UL94V-0)	black
4	terminal	phosphor bronze	silver

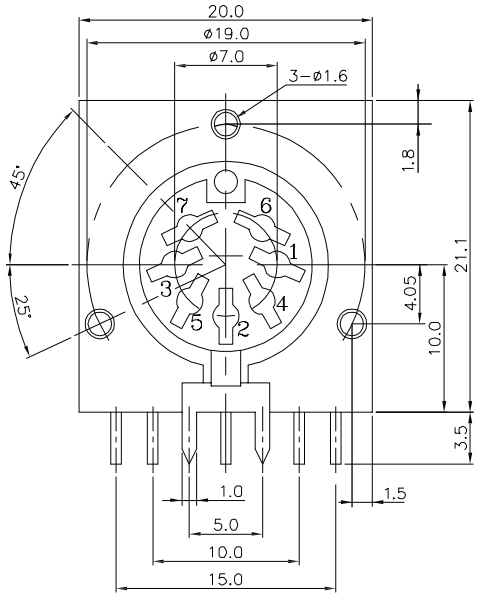

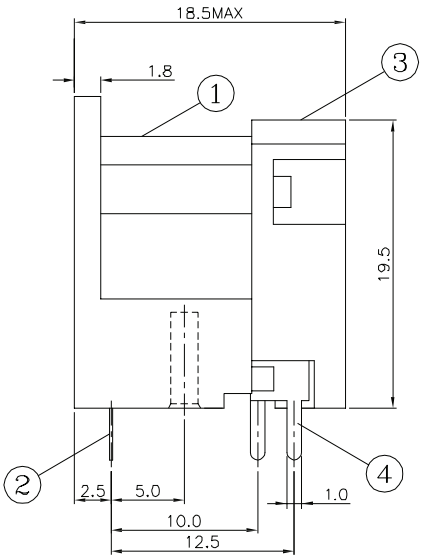

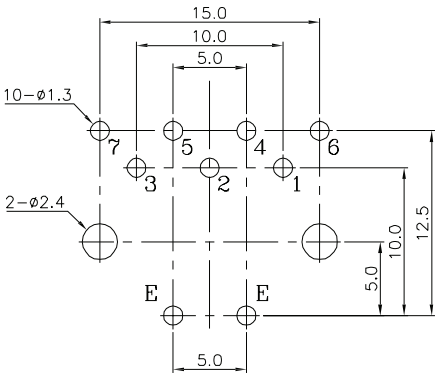

Recommended PCB Layout
Top View

MECHANICAL DRAWING (SDS-80J)

units: mm
tolerance: ±0.3 mm
PCB tolerance: ±0.05 mm

ITEM	DESCRIPTION	MATERIAL	PLATING/COLOR
1	housing	PBT (UL94V-0)	black
2	ground	phosphor bronze	copper/tin
3	cover	PBT (UL94V-0)	black
4	terminal	phosphor bronze	copper/tin

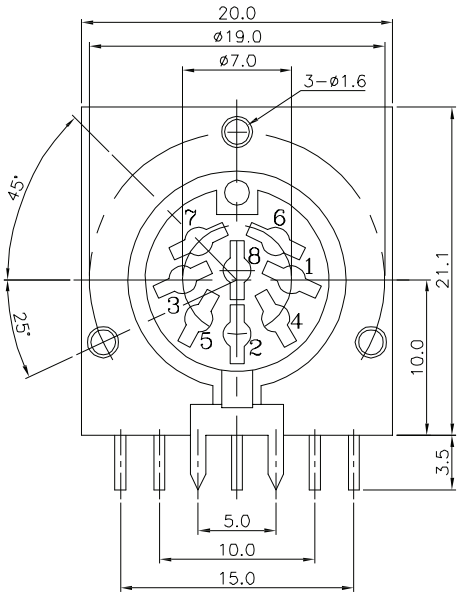

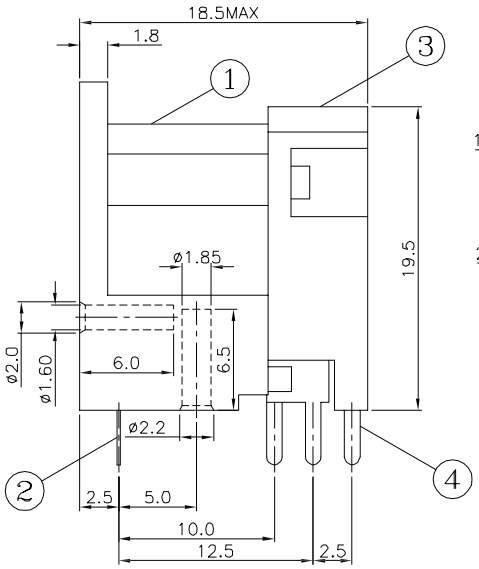

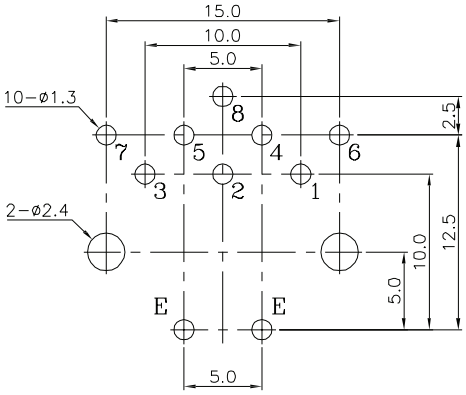

Recommended PCB Layout
Top View

MECHANICAL DRAWING (SDD-130J)

units: mm
tolerance: ±0.3 mm
PCB tolerance: ±0.05 mm

ITEM	DESCRIPTION	MATERIAL	PLATING/COLOR
1	terminal	phosphor bronze	silver
2	ground	phosphor bronze	silver
3	housing	PBT (UL94V-0)	black
4	cover	PBT (UL94V-0)	black

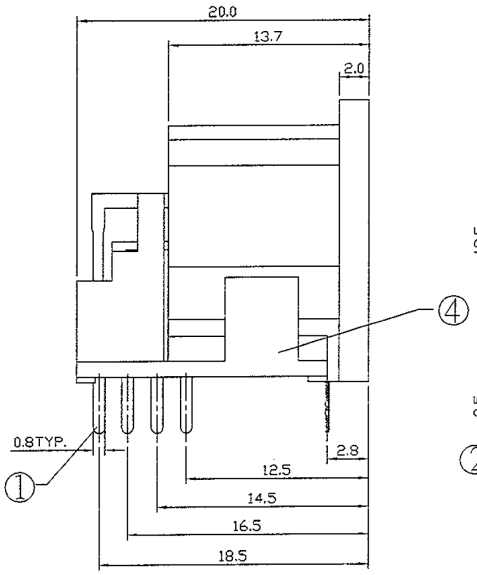

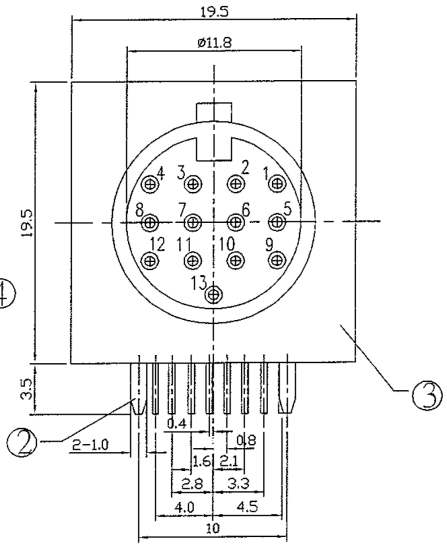

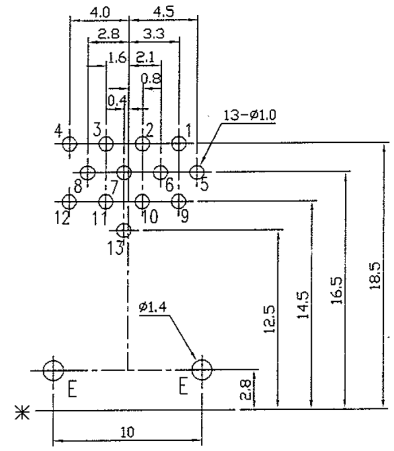

Recommended PCB Layout
Top View

REVISION HISTORY

rev.	description	date
1.0	initial release	02/23/2006
1.01	new template applied	04/26/2012
1.02	updated spec	01/15/2014
1.03	updated datasheet	09/08/2017
1.04	updated datasheet	07/24/2018
1.05	discontinued model SDS-30J, brand update	10/08/2019
1.06	updated housing	02/13/2020
1.07	logo, datasheet style update	08/05/2022

The revision history provided is for informational purposes only and is believed to be accurate.

CUI Devices offers a one (1) year limited warranty. Complete warranty information is listed on our website.

CUI Devices reserves the right to make changes to the product at any time without notice. Information provided by CUI Devices is believed to be accurate and reliable. However, no responsibility is assumed by CUI Devices for its use, nor for any infringements of patents or other rights of third parties which may result from its use.

CUI Devices products are not authorized or warranted for use as critical components in equipment that requires an extremely high level of reliability. A critical component is any component of a life support device or system whose failure to perform can be reasonably expected to cause the failure of the life support device or system, or to affect its safety or effectiveness.