CUI INC
a bel group

SERIES: SWI3-N-USB | DESCRIPTION: AC-DC POWER SUPPLY

FEATURES

- up to 3 W continuous power
- DoE Level VI efficiency
- universal input voltage range
- ultra-compact case
- no load power consumption < 0.075 W
- over voltage, over current, and short circuit protections
- UL/cUL, PSE, FCC safety approvals
- Class II construction
- UL 62368 certified

MODEL

MODEL	output voltage (Vdc)	output current max (A)	output power max (W)	ripple and noise[1] max (mVp-p)	efficiency level
SWI3-5-N-I38	5	0.6	3	150	VI

Notes: 1. At full load, nominal AC input voltage, 25°C, 20 MHz bandwidth oscilloscope, output terminated with 0.1 µF and 10 µF capacitors to ground.

PART NUMBER KEY

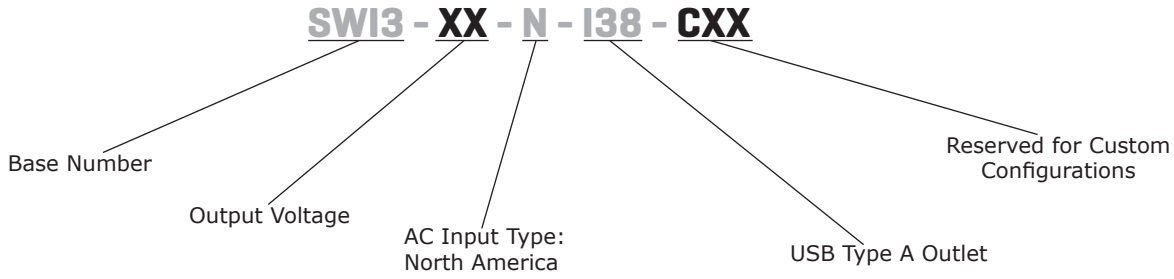

INPUT

parameter	conditions/description	min	typ	max	units
voltage		90		264	Vac
frequency		47		63	Hz
current	at nominal input voltage			0.2	A
leakage current	at nominal input voltage & frequency			0.02	mA
no load power consumption	at 115/230 Vac, 60/50 Hz			0.075	W

OUTPUT

parameter	conditions/description	min	typ	max	units
line regulation		4.9		5.4	Vdc
load regulation		4.9		5.4	Vdc
start-up time	at 115 Vac			3	s

PROTECTIONS

parameter	conditions/description	min	typ	max	units
over current protection	auto recovery			0.9	A
short circuit protection					

SAFETY & COMPLIANCE

parameter	conditions/description	min	typ	max	units
isolation voltage	input to output at 10 mA for 1 minute		3,000 4,242		Vac Vdc
safety approvals	UL/cUL, PSE				
EMI/EMC	FCC Part 15 Subpart B Class B				
MTBF	as per Telcordia SR-332 (Issue 2), at 115/230 Vac, full load, 0°C~40°C	50,000			hours
RoHS	2011/65/EU				

ENVIRONMENTAL

parameter	conditions/description	min	typ	max	units
operating temperature		0		40	°C
storage temperature		-20		60	°C
operating humidity	non-condensing	20		85	%
storage humidity	non-condensing	5		95	%

MECHANICAL

parameter	conditions/description	min	typ	max	units
dimensions	47.40 x 36.30 x 22.80				mm
inlet plug	North America, 2-pin				
weight			26		g

MECHANICAL DRAWING

units: mm

PIN	Output Voltage
1	+5V
2	Short
3	Short
4	GND

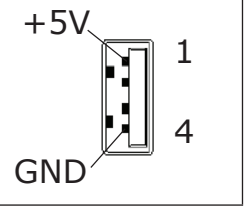

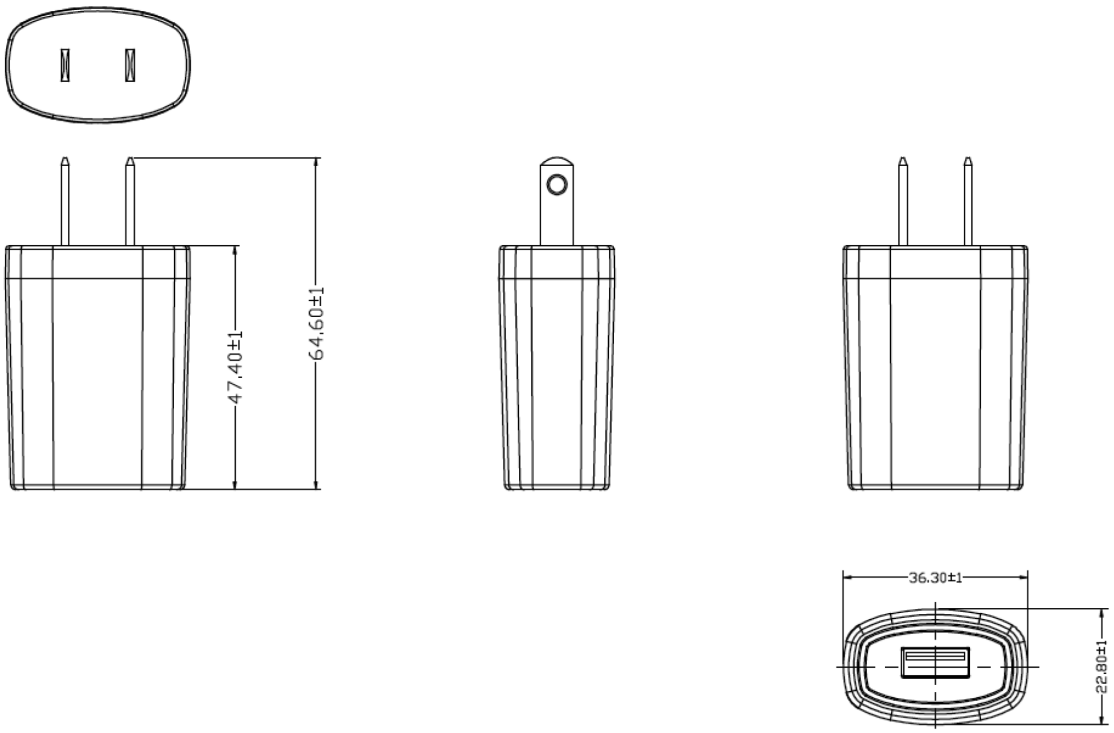

REVISION HISTORY

rev.	description	date
1.0	initial release	09/14/2017
1.01	updated features	07/22/2020
1.02	safety marks updated	04/22/2021

The revision history provided is for informational purposes only and is believed to be accurate.

CUI INC
a bel group

Headquarters
20050 SW 112th Ave.
Tualatin, OR 97062
800.275.4899

Fax 503.612.2383
cui.com
techsupport@cui.com

This device complies with part 15 of the FCC Rules. Operation is subject to the following two conditions:
(1) This device may not cause harmful interference, and
(2) this device must accept any interference received, including interference that may cause undesired operation.

CUI offers a one (1) year limited warranty. Complete warranty information is listed on our website.

CUI reserves the right to make changes to the product at any time without notice. Information provided by CUI is believed to be accurate and reliable. However, no responsibility is assumed by CUI for its use, nor for any infringements of patents or other rights of third parties which may result from its use.

CUI products are not authorized or warranted for use as critical components in equipment that requires an extremely high level of reliability. A critical component is any component of a life support device or system whose failure to perform can be reasonably expected to cause the failure of the life support device or system, or to affect its safety or effectiveness.