CUI INC
a bel group

SERIES: VF-S250-XXA | DESCRIPTION: AC-DC POWER SUPPLY

FEATURES

- up to 250 W continuous power
- 600 W peak power within 500 µs duty duration
- passive power factor correction
- power good signal
- remote on/off control
- 3000 Vac isolation voltage
- over load, over voltage, over temperature, and short circuit protections
- UL, cUL, and TUV 62368-1 safety approvals
- efficiency up to 85%

MODEL	output voltage (Vdc)	output current max (A)	output power [1] max (W)	ripple and noise [2,3] max (mVp-p)	efficiency typ (%)
VF-S250-05A*	5	40	200	50	75%
VF-S250-09A*	9	25	225	90	83%
VF-S250-12A	12	20.83	250	120	80%
VF-S250-15A	15	16.67	250	150	83%
VF-S250-18A	18	13.89	250	180	83%
VF-S250-24A	24	10.42	250	240	83%
VF-S250-28A	28	8.93	250	280	83%
VF-S250-36A	36	6.93	250	360	83%
VF-S250-48A	48	5.21	250	480	83%
VF-S250-54A	54	4.63	250	540	83%

Notes:
1. Maximum power must not exceed 135 W with convection cooling or 250 W with 16 CFM forced air. The 5 and 9 Vdc models have a maximum of 100 W and 121.5 W respectively for convection cooling.
2. 1% minimum load is required to maintain the ripple and regulation.
3. Ripple and noise is measured from 10 KHz to 20 MHz at output terminals with a 0.1 µF ceramic capacitor and a 22 µF electrolytic capacitor in parallel.
4. * Discontinued model.

PART NUMBER KEY

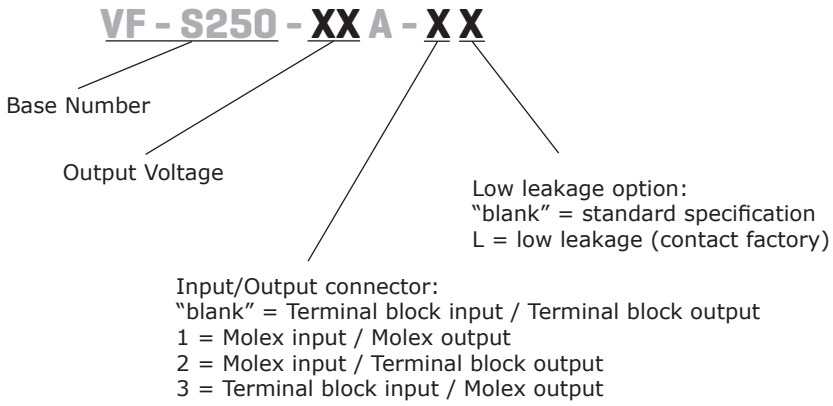

INPUT

parameter	conditions/description	min	typ	max	units
voltage	auto selectable	90 180		132 264	Vac Vac
frequency		47		63	Hz
current	at 110~120 Vac, cold start at 200~240 Vac, cold start			6 3	A A
inrush current	at 115 Vac, cold start at 230 Vac, cold start			35 70	A A
power factor	compliant to EN 61000-3-2 class A				
remote on/off	designated as RMSW on the CN1, requires a low signal to inhibit output, off behavior: hiccup mode				

OUTPUT

parameter	conditions/description	min	typ	max	units
regulation			±1		%
transient response	output voltage returns to within 1% in less than 2.5 ms for a 50% load change peak transient does not exceed 5%.				
start-up time	at 230 Vac			1	s
hold-up time	at 80% of rated maximim load	20			ms
adjustability			±5		%
switching frequency	fixed		25		kHz
power good	designated as PG on the CN1, signal goes high 100~500 ms after the output reaches regulation, signal goes low at least 1 ms before loss of regulation (open collector).				
fan drive	12 Vdc / 300 mA for external fan				

PROTECTIONS

parameter	conditions/description	min	typ	max	units
over voltage protection	AC input needs to be reset to restart the power supply			130	%
over current protection	automatically recovers	110		140	%
short circuit protection	short circuit can be continuous, recovers automatically				
over temperature protection	auto recovery		110		°C

SAFETY & COMPLIANCE

parameter	conditions/description	min	typ	max	units
isolation voltage	for 3 seconds at 10 mA max primary to secondary: primary to transformer core: primary to earth chassis:	 3,000 1,500 1,500			 Vac Vac Vac
safety approvals	IEC/EN/UL 62368-1				
EMI/EMC	EN 55032 Class B conducted / radiated, EN 61000-3-2, EN 61000-3-3, EN 55024 (IEC 61000-4-2, IEC 61000-4-3, IEC 61000-4-4, IEC 61000-4-5, IEC 61000-4-6, IEC 61000-4-8, IEC 61000-4-11)				
leakage current	standard model at 264 Vac low-leakage model at 240 Vac low-leakage model at 120 Vac			1 500 300	mA µA µA
RoHS	yes				
MTBF	according to MIL-HDBK-217 at 30ºC	100,000			hrs

ENVIRONMENTAL

parameter	conditions/description	min	typ	max	units
operating temperature		0		70	°C
storage temperature		-20		85	°C
operating humidity	non-condensing	5		90	%
storage humidity	non-condensing	5		95	%
vibration	acceleration ±7.35 M/(SxS), on X, Y and Z Axis	5		50	Hz

DERATING CURVE

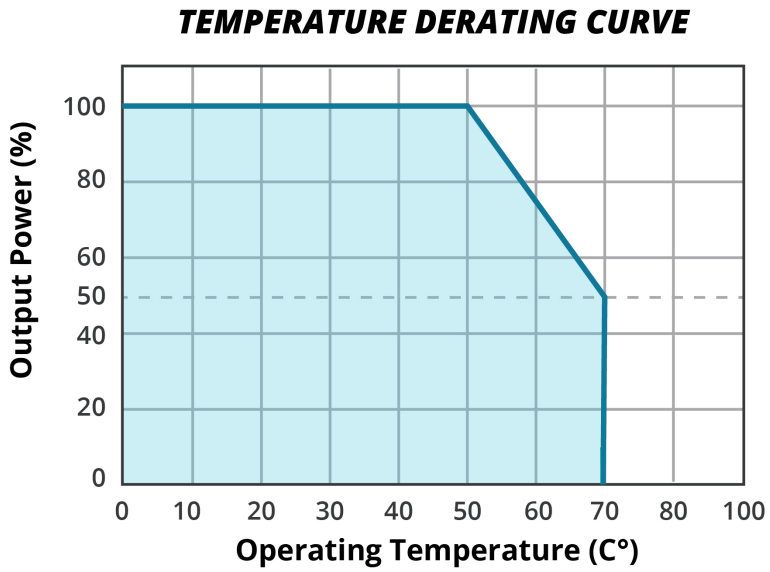

MECHANICAL

parameter	conditions/description	min	typ	max	units
dimensions	127.00 x 81.28 x 38.10 (5 x 3.2 x 1.5 inch)				mm
weight			400		g

MECHANICAL DRAWING

units: mm

CN1	
1	ground
2	ac neutral
3	ac line

CN2	
1	Vo+
2	Vo+
3	Vo+
4	Vo-
5	Vo-
6	Vo-

CN3	
1	Power Good
2	remote switch
3	RTN

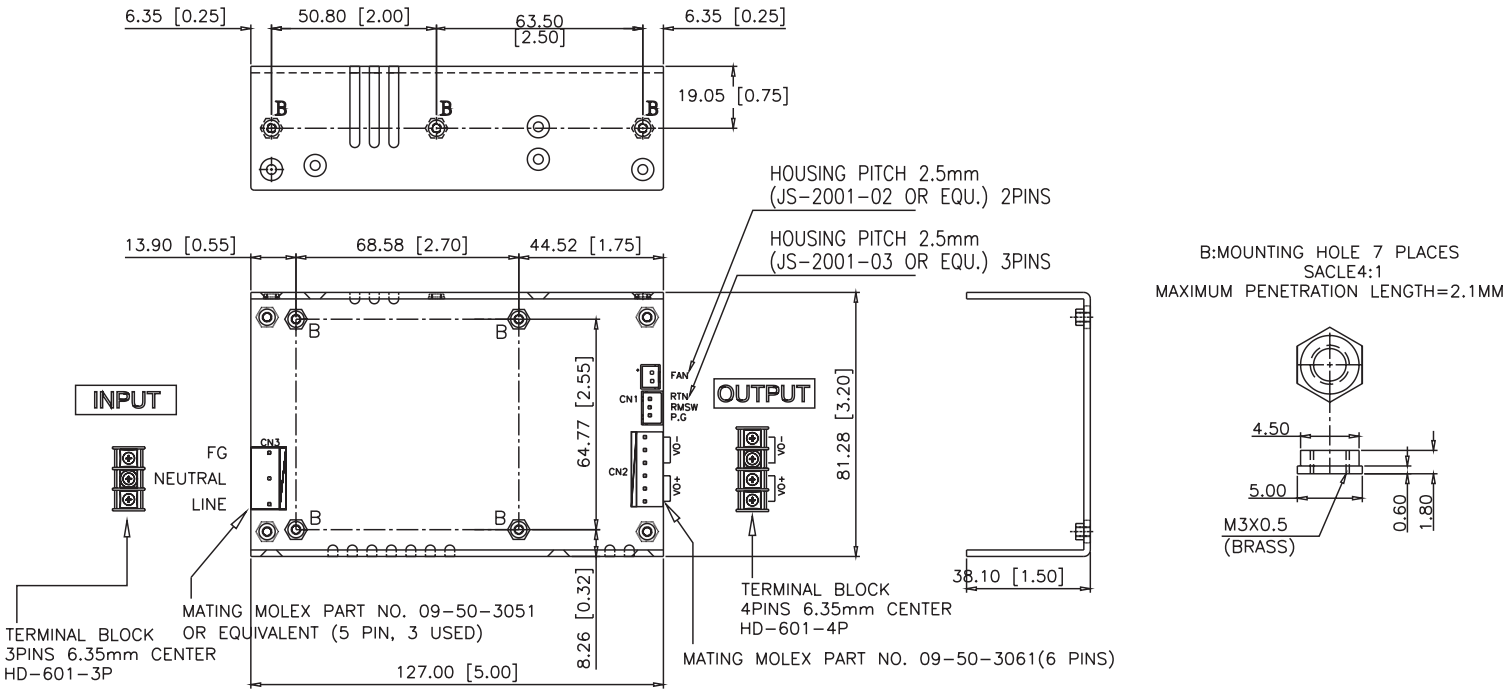

Notes:
1. CN1 mates with molex part no. 09-93-0500 and molex 2478, 2578, 8818 crimp pins.
2. CN2 mates with molex part no. 09-93-0600 and molex 2478, 2578, 8818 crimp pins.
3. CN3 mates with JST part no. XHP-3 or equivalent (Chyao Shiunn JS-2001-03) and JST SXH-002T-P0.6 mating pins
4. Fan drive connector mates with JST part no. XHP-2 or equivalent.
5. Mounting hole maximum M3 screw penetration depth is 2.1 mm.

REVISION HISTORY

rev.	description	date
1.0	initial release	05/05/2009
1.01	new template applied	12/16/2011
1.02	V-Infinity branding removed	08/28/2012
1.03	updated Molex mating connector part numbers	07/11/2013
1.04	updated spec	08/13/2013
1.05	updated to be certified to 62368-1 safety standard	07/02/2019
1.06	company logo updated	12/22/2020
1.07	updated remote on/off line & derating curve	04/26/2021
1.08	product image updated	03/24/2022
1.09	discontinued models VF-S250-05A & VF-S250-09A	06/02/2022
1.10	mechanical drawing updated	03/21/2023

The revision history provided is for informational purposes only and is believed to be accurate.

CUI INC
a bel group

Headquarters
20050 SW 112th Ave.
Tualatin, OR 97062
800.275.4899

Fax 503.612.2383
cui.com
techsupport@cui.com

CUI offers a two (2) year limited warranty. Complete warranty information is listed on our website.

CUI reserves the right to make changes to the product at any time without notice. Information provided by CUI is believed to be accurate and reliable. However, no responsibility is assumed by CUI for its use, nor for any infringements of patents or other rights of third parties which may result from its use.

CUI products are not authorized or warranted for use as critical components in equipment that requires an extremely high level of reliability. A critical component is any component of a life support device or system whose failure to perform can be reasonably expected to cause the failure of the life support device or system, or to affect its safety or effectiveness.